This is a digital copy of a book that was preserved for generations on library shelves before it was carefully scanned by Google as part of a project to make the world's books discoverable online.

It has survived long enough for the copyright to expire and the book to enter the public domain. A public domain book is one that was never subject to copyright or whose legal copyright term has expired. Whether a book is in the public domain may vary country to country. Public domain books are our gateways to the past, representing a wealth of history, culture and knowledge that's often difficult to discover.

Marks, notations and other marginalia present in the original volume will appear in this file - a reminder of this book's long journey from the publisher to a library and finally to you.

Usage guidelines

Google is proud to partner with libraries to digitize public domain materials and make them widely accessible. Public domain books belong to the public and we are merely their custodians. Nevertheless, this work is expensive, so in order to keep providing this resource, we have taken steps to prevent abuse by commercial parties, including placing technical restrictions on automated querying.

We also ask that you:

+ *Make non-commercial use of the files* We designed Google Book Search for use by individuals, and we request that you use these files for personal, non-commercial purposes.
+ *Refrain from automated querying* Do not send automated queries of any sort to Google's system: If you are conducting research on machine translation, optical character recognition or other areas where access to a large amount of text is helpful, please contact us. We encourage the use of public domain materials for these purposes and may be able to help.
+ *Maintain attribution* The Google "watermark" you see on each file is essential for informing people about this project and helping them find additional materials through Google Book Search. Please do not remove it.
+ *Keep it legal* Whatever your use, remember that you are responsible for ensuring that what you are doing is legal. Do not assume that just because we believe a book is in the public domain for users in the United States, that the work is also in the public domain for users in other countries. Whether a book is still in copyright varies from country to country, and we can't offer guidance on whether any specific use of any specific book is allowed. Please do not assume that a book's appearance in Google Book Search means it can be used in any manner anywhere in the world. Copyright infringement liability can be quite severe.

About Google Book Search

Google's mission is to organize the world's information and to make it universally accessible and useful. Google Book Search helps readers discover the world's books while helping authors and publishers reach new audiences. You can search through the full text of this book on the web at `http://books.google.com/`

A 753,900 DUPL

1837
ARTES
VERITAS
SCIENTIA
LIBRARY OF THE
UNIVERSITY OF MICHIGAN
TUEBOR
SI QUAERIS PENINSULAM AMOENAM
CIRCUMSPICE
DEPARTMENT
OF
ENGINEERING

Engin. Library
TJ
230
.R52

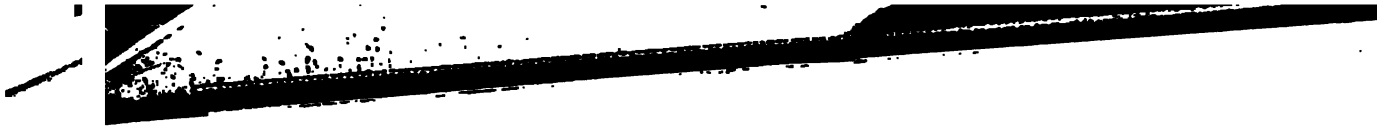

33671

A

MANUAL OF MACHINE CONSTRUCTION

FOR

ENGINEERS,

DRAUGHTSMEN, AND MECHANICS,

EMBRACING

EXAMPLES, RULES, TABLES, AND REFERENCES.

BY
JOHN RICHARDS.

PHILADELPHIA:
J. B. LIPPINCOTT COMPANY.
1889.

Copyright, 1889, by John Richards.

Release 5-22-41 MJ

PUBLISHERS' NOTICE.

THE plan of this work is original and unique. The book is thoroughly practical and is the latest and best authority on the subjects treated, and, although concisely written, it reaches to minute details not to be found elsewhere in print. It is not a work of instruction so much as a book of direct application, intended as it is to meet the every-day wants of the practical engineer, draughtsman, and mechanic in his workshop, and is the first of its kind ever published. The time and labor expended upon it can be estimated by attempting to compile a single table of proportions such as are employed. These tables are not made up by diagrams and assumed proportions, but are the result of actual practice and worked out from complete drawings. The references comprised are those constantly required in actual practice; in fact, the selection is made by noting for a number of years the relative frequency of references to the different subjects in the work.

The value of the book can be ascertained by writing down a number of questions such as occur in constructive practice and comparing the information obtained from this work with that given by other works of reference, when the fullness and trustworthiness of the former will be readily seen.

Mr. John Richards, the author of the present treatise, is a native of Pennsylvania, and has been engaged in constructive engineering work for a period of thirty-five years at home and abroad. He is a practical mechanic in both metal and wood work, besides being a designer and constructer of machine work of all kinds, including steam hydraulics, machine tools, and mill gearing. His previous writings comprise a number of valuable treatises on various mechanical subjects, also many essays and papers that are well known.

He was principal of the firm of Richards, London & Kelley, at Philadelphia; of Richards & Atkinson, of Manchester, England; the founder of the American Standard Gauge Works, and the San Francisco Tool Company; is a director in Geo. Richards & Co. (Limited), Manchester, England; and is now the editor and proprietor of the journal *Industry*, published in San Francisco.

Mr. Richards has prepared original designs for more than one thousand machines now in common use in America and Europe. These designs embrace steam and hydraulic apparatus, implements of all kinds for working iron and wood, and among these a number of special machines for the Elswick Works of Sir William Armstrong & Co., in England, also for the Royal Arsenal in St. Petersburg, Russia.

His experience in engineering practice includes not only this country and England, where he resided for many years, but also Continental Europe, where his designs are widely known and used, notice being directed to them by Mr. Richards's books, published by Messrs. E. & F. N. Spon, of London.

J. B. LIPPINCOTT COMPANY.

PHILADELPHIA, 1889.

EXPLANATORY NOTE.

As the present work varies in several respects from the common form, some explanation will be in place.

Each alternate page of this book is left blank for convenience in reference and also to receive the owner's notes and original matter, which will rapidly accumulate, so that in course of time the work will become a veritable vade-mecum.

The page titles and numbers are placed at the bottom to facilitate convenience in reference, so that any page can readily be found by turning up either corner without opening the book. In the case of continued subjects, the preceding leaf can be placed in conjunction by folding.

In the tables of proportions the dimensions can easily be changed to meet special cases by adding or subtracting a percentage, or supplementary letters of reference can be written on the diagrams and new columns for dimensions be added on the ruled pages.

The plan of the book is at once convenient, durable, and useful. It has been arranged, as nearly as possible, to meet the requirements of actual practice in the office, draughting-room, and works.

SUMMARY OF CONTENTS.

SECTIONS.

SECTION FIRST . . . . . MACHINE DESIGN.
SECTION SECOND . . . . . THE TRANSMISSION OF POWER.
SECTION THIRD . . . . . STEAM MACHINERY.
SECTION FOURTH . . . . . HYDRAULICS.
SECTION FIFTH . . . . . PROCESSES AND PROPERTIES.
SECTION SIXTH . . . . . TABLES AND MEMORANDA.

CHAPTERS.

Chapter I.....Machine Design
Chapter II.....Rotary Bearings
Chapter III.....Sliding Bearings
Chapter IV.....Power Transmission
Chapter V.....Driving Belts
Chapter VI.....Rope Driving Gearing
Chapter VII ...Hydraulic Transmission
Chapter VIII...Electrical Transmission
Chapter IX.....Steam Machinery
Chapter X.....Connecting Rods
Chapter XI....Cross-heads for Engines
Chapter XII.....Steam Boilers
Chapter XIII.....Hydraulics
Chapter XIV.....Water Power
Chapter XV..Water Raising Machinery
Chapter XVI.....Centrifugal Pumps
Chapter XVII.....Pipes and Fittings
Chapter XVIII..Mechanical Draughting
Chapter XIX.....Heat
Chapter XX.....Dynamics
Chapter XXI.....Properties of Material
Chapter XXII..Tables and Memoranda

CONTENTS.

INTRODUCTION.

	PAGE		PAGE
Publishers' Notice	1	Arrangement and Proportion	9
Explanatory Note	2	Strength of Material	10
General Remarks	8	Remarks on Tables and Formulæ	11

SECTION FIRST.

CHAPTER I.—MACHINE DESIGN.

Example Design	13	Curved and Straight Spokes	18
Sections for Machine Frames	15	Machine Columns and Standards	18
Rib and Plate Sections	15	Remarks on Machine Frames	19
Rounded Ribs	16	Machine Supports	20
Hollow or Box Sections	16	Frame Joints	21
Fly-Wheel Rims	17	Bosses for Screws and Nuts	22
Spokes and Struts	17	Bosses for Foundation Bolts	22

CHAPTER II.—BEARINGS FOR SHAFTS AND SPINDLES.

Remarks on Bearings	23	Open Pedestal Bearings	31
Alloys for Machine Bearings	23	Adjustable Pivot Bearings	31
Cast Bearings	24	Suspension Brackets	33
Journal Box for Wood Frames	25	Open-Side Brackets	34
Rigid Journal Bearings	25	Counter-Shaft Brackets	35
Heavy Pedestal Bearings	26	Tapered Bearings	36
Diagonal Pedestal Bearings	28	Spindle Bearings	37
Pivoted Shaft Bearings	29	Solid Spindle Bearings	38
Lubrication	29	Schiele Bearings	39
Pivoted Pedestal Bearings	30		

CHAPTER III.—SLIDING BEARINGS.

Remarks on Sliding Bearings	40	Angular Ways	42
Gib Joints	40	Inverted Angular Ways	42
Angular Gibs	40	Rectangular Ways	42
Gib Wedges	41	Cutter-Bar Guides	43
Tool Slide Joint	41	Radial Bearings	43
Ledge Gib Joint	41		

SECTION SECOND.

CHAPTER IV.—THE TRANSMISSION OF POWER.

General Remarks	45	Counter-Shafts for Belts	53
Tooth-Wheel Gearing	46	Fixed Studs	54
Line Shafts	46	Shaft Collars	55
Lengths of Line Shafts	47	Split Collars	56
Size of Shafts	47	Fastening Keys	57
Speed of Line Shafts	48	Flat Keys	58
Weight of Iron Shafts	49	Feather Keys	58
Long Line Shafts	49	Sliding Feathers	59
Shaft Couplings	49	Conical Bushes	59
Clamp Couplings	50	Common Keys	60
Flange Couplings	51	Set Screws	60
Muff Couplings	52		

CHAPTER V.—DRIVING BELTS.

	PAGE		PAGE
General Remarks	61	Right-Angle Driving	64
Size or Power of Belts	62	Half-Crossed Belts	65
Convexity of Pulley Faces	62	Change or Cone Pulleys	66
Pulley Flanges for Belts	62	Unusual Belts	67
Guidance of Belts	63		

CHAPTER VI.—ROPE-DRIVING GEARING.

Cotton and Hemp Ropes	67	Power transmitted by Wire Ropes	68
Power transmitted by Ropes	67	Wire-Rope Pulleys	69
Wire Ropes	68	Price of Wire-Rope Pulleys (Note)	69
Working Strain for Wire Ropes	68	Arrangement of Wire-Rope Plant	70

CHAPTER VII.—HYDRAULIC TRANSMISSION.

General Remarks	70	Principles of Hydraulic Transmission	70

CHAPTER VIII.—STEAM, AIR, AND GAS TRANSMISSION.

Steam Transmission	72	Electrical Transmission	73
Air Transmission	72	Cost of Electrical and other Plants	74
Gas Transmission	73		

SECTION THIRD.

CHAPTER IX.—STEAM MACHINERY.

General Remarks	75	Engine Slide Valves	80
Classification of Steam Engines	75	Lap of Engine Valves	81
Notes on Steam Engines	76	Cost of Steam Engines	81
Nominal Horse-Power	77	Locomotive Slide Valves	82
Indicated Horse-Power	77	Steam-Engine Frames	82
Actual Horse-Power	78	Overhung Engine Cranks	83
Indicating Diagrams	78	Engine Crank Shafts	84
Mean Effective Pressure of Steam	78	Engine Crank Pins	84
Volume and Temperature of Steam	79	Engine Fly Wheels, Weight of	84
Flow of Steam	79	Engine Main Bearings	85
Area of Steam Ports	79		

CHAPTER X.—ENGINE CONNECTING RODS.

General Remarks	85	Strap-End Connecting Rods	88
Box-End Connecting Rods	85	Closed-Link Ends	89
Solid-End Connecting Rods	86	Safety Connecting Rod	90

CHAPTER XI.—ENGINE CROSS-HEADS AND GLANDS.

Remarks on Cross-Heads	90	Box Cross-Heads	92
Connecting-Rod Strains	90	Bar Cross-Heads	93
Slipper Cross-Heads	91	Packing Glands	93

CHAPTER XII.—STEAM BOILERS.

General Remarks	94	Vertical Tubular Boilers	97
Strength of Boiler Shells	94	Cornish and Lancashire Boilers	97
Tensile Strength of Plates	95	Proportions for Cornish and Lancashire Boilers	98
Ultimate Strength of Boiler Shells	95	Boiler Flues and Tubes	98
United States Standard for Boilers	95	Heating Surface of Tubes	98
Boiler Proportions	96	Notes on Boiler Furnaces	98
Size of Boiler Rivets	96		
Multitubular Boiler Proportions	96		

SECTION FOURTH.

CHAPTER XIII.—HYDRAULICS.

	PAGE		PAGE
General Remarks	99	Conducting Capacity of Pipes	102
Useful Hydraulic Memoranda	99	Capacity of Small Pipes	103
Power required to raise Water	100	Capacity of Large Pipes	104
Measuring Water	101	Loss of Head by Bends	105
Miners' Inches of Water	102	Table of Loss by Bends	105

CHAPTER XIV.—WATER WHEELS.

Remarks on Water Wheels	105	Speed of Water Wheels	108
Classification of Water Wheels	106	Efficiency of Water Wheels	109
Turbine Water Wheels	106	Selection of Water Wheels	110
Inward-Flow Turbines	107	Propelling Machinery	110
Fourneyron Turbines	107	Notes on Paddle Wheels	110
Jonval Turbines	107	Notes on Propellers	110
Girard Turbines	108		

CHAPTER XV.—WATER-RAISING MACHINERY.

Water-Works Pumps	111	Double Pumps	113
Efficiency, Expense, and Cost of Engines.	111	Triple Pumps	113
Cost of Pumping Engines	112	Direct-Action Steam Pumps	114
Boilers for Water Works	112	Proportions for Steam Pumps	114
Memoranda for Pumps	112	Bucket-Plunger Pumps	115
Velocity of Water in Suction Pipes	112	Open-Top Pumps	115
Common Suction Pumps	113	Double-Cylinder Pumps	116
Double-Action Pumps	113		

CHAPTER XVI.—CENTRIFUGAL PUMPS.

Remarks on Centrifugal Pumps	116	Thrust on Pump Wheels	119
Capacity of Centrifugal Pumps	117	Suction Pipes for Centrifugal Pumps	119
Speed of Wheels for Centrifugal Pumps	117	Water Passages of Centrifugal Pumps	119
Diameter of Pump Wheels	117	Incased Pump Wheels	120
Dimensions, Speed, etc., of Pumps	118	Centrifugal Pump Memoranda	120
Casing for Centrifugal Pumps	119		

CHAPTER XVII.—PIPES AND FITTINGS.

General Remarks on Pipes	121	Cast-Iron Pipe Flanges	124
Pipe Angles	122	Riveted Pipes	124
Flanges for Wrought-Iron Pipes	123	Dimensions for Riveted Pipes	124
Collar Joints for Pipes	123		

SECTION FIFTH.

CHAPTER XVIII.—MECHANICAL DRAUGHTING.

Draughting Paper	125	Trigonometrical Terms	127
Sizes of Whatman Paper	125	Wheel Gearing	128
Photo, or Sun-Print Paper	126	Pitch of Wheel Teeth	128
Developed Curves	126	Diameter of Gear Wheels	129
Dimension Lines	126	Dimensions for Cast-Iron Wheels	129
Section Lines or Shading	127	Shape of Wheel Teeth	129
Sketch Drawing	127	Developing Wheel Teeth	130
Elements of Circles	127	Common Wrenches	131

CHAPTER XIX. HEAT.

	PAGE		PAGE
Mechanical Equivalent of Heat	132	Miscellaneous Temperatures	133
Specific Heat	132	Compression of Air	133
Latent Heat	132	Expansion of Air	133
Fahrenheit Scale	132	Conducting Power of Metals	134
Melting Temperatures	133	Heating Buildings	134
Temperature of Steam	133		

CHAPTER XX. DYNAMICS

The Conservation of Forces	134	Falling Velocity	135
Momentum	135	Pressure of Wind	136
Centrifugal Force	135	Crank Balancing	136
Impact	135		

CHAPTER XXI. PROPERTIES OF MATERIALS

Blister Steel	137	Weight of Round and Square Bars	139
Spring Steel	137	Weight of Rectangular Bars	139
Shear Steel	137	Weight of Various Metals	139
Cast Steel	137	Weight of Sheet Metal	140
Bessemer Steel	137	Weight and Strength of Materials	140
Siemens-Martin Steel	137	Properties of Metals	140
Special Steel	138	Weight of Various Substances	140
Strength of Steel	138	Weight of Cast Iron Pipes	141
Wrought and Cast Iron	138	Common Wrought Iron Pipes	141
Shrinkage of Castings	138	Strength of Hemp Ropes	141
Electrical Conducting Power	138	Strength of Iron Chains	141

SECTION SIXTH

CHAPTER XXII. WEIGHTS, MEASURES, ETC.

Linear Measures	142	Screws, Bolts, and Nuts	144
English Linear Measure	142	Size of Wood and Machine Screws	144
Metrical Linear Measure	142	Weight of Iron Castings	144
Metrical Weights	143	Areas of Circles	145
Decimal Fractions of Inches	143	Circumferences of Circles	147
Knots and Statute Miles	143	Square Roots and Cube Roots	150

GENERAL REMARKS

BY THE AUTHOR.

Books of reference containing data for engineering and mechanical work usually cover such an extensive range of subjects that conciseness forces the employment of algebraic formulæ in nearly all cases. This condensed and convenient method has both advantages and disadvantages. Among the latter, the fact that many who desire to use the information do not understand the formulæ; also, that the method is tedious, requiring computations in each case. This remark applies especially to the construction of machines where there are usually a series or number of sizes corresponding except as to dimensions. In such cases tables are preferable; or, in other words, formulæ should be extended into tables ready for use.

There is also the further difficulty in machine design and proportions, of variable functions and quantities not amenable to exact rules, but which can be dealt with in tables made up from experiments and examples. Simple, convenient rules are too much neglected in our text books. There is generally a conflict between brevity and error in such rules, but short ones with the degree of their error, are much easier to remember than long ones that are exact. For example:—the velocity of spouting matter is in feet per second, eight times the square root of the head; the speed of the wheel of a centrifugal pump is in feet per minute, 600 times the square root of the head in feet; the contents of a pipe or cylinder in gallons for each foot of length, is found by dividing the square of the diameter in inches by twenty-five. The first two of these rules are derived from the well-known formulæ, $V=\sqrt{2gH}$, expressing the accelerated velocity, or the law of falling bodies, and are accurate enough for all practical purposes, although they contain slight error. The third one has an error of .53 in the divisor, but in nine cases out of ten will answer for hurried calculation.

Physics, dynamics, hydraulics, and all branches of physical science now rest upon mathematical basis not easily disturbed by short methods. They admit of exact treatment whenever required, but constructive processes, arrangement and proportions of machine parts, cannot make such claim, and perhaps never will.

The writer once supposed, and ventured to claim, that these things could be made amenable to exact, or measurably exact rules.* This opinion has been abandoned for a belief that special knowledge and experience must remain the greater part, and books, references, and rules can deal only in a limited way with constructive engineering. This view has been further confirmed by observing the influence of what is called technical training in this and other countries. Colleges and schools of the kind have had a marvelous effect in Germany during forty years past, but not in the manner commonly supposed. The theoretical part or foundation of skilled industry was thus provided, but the processes and implements come mainly from England and this country.

At the present day wages have risen on the Continent of Europe to only one half as much as in England, or one third as much as in this country, still the labor cost of skilled production is seldom less. The noncomputable part is wanting. This is no disparagement of technical training, but shows that its effect does not extend to the completed product.

It is exceedingly difficult to define the line between what is computable and what is not, in the construction of machinery. The attempt is made in the following remarks, which are suggestive rather than final, and are included because essential to a full understanding of what is to follow.

Arrangement.—The main elements of machine design are arrangement and proportion; the latter includes dimensions based on the strength of material and strains, computable, known, or assumed.

The arrangement, or as it is called, design for machinery, is mainly from a kind of intuition arising from experience, observation, and analogy. It involves but little that is computable in the inception, although a design when completed is amenable to accepted rules of good practice, symmetry, and to some extent rules of computation.

Adaptation to purpose, the main thing, is not computable; it involves the conditions of operation and use known only by experiment and analogy. To those skilled in machine construction, the symmetry of design is qualified by adaptation to purpose, and the harmony between the two grows more apparent as practice becomes more perfect.

"Whatever is right, looks right," was a motto of one of the most able designers of machinery that our country has produced. It is an essay in five words, and indicates the coming, if not the present, standard among those most able to judge.

Proportions.—An objection that will no doubt be made to the proportions given in the present work, will be that they do not conform to theoretical rules. This will be true of the tables in many cases, as it is of good practice, and is likely to remain so in future.

* Workshop Manipulation—E. & F. N. Spon, London, 1878.

In static structures, or "fixed work," where strains are known and computable, dimensions can be based upon the strength and physical qualities of the material, but in machinery involving motion, such rules are seldom applicable, except in respect to determinable strain.

Accidental strains are a disturbing factor present in nearly all cases, and is, in fact, the main one in determining proportions. Such strains are not computable and seldom deducible, except from experience, and then mainly by conjecture or comparison; hence we find the proportions of machinery bear but little relation to normal or computable strains, and in the same degree will dimensions vary from theoretical rules.

Adaptation to constructive processes often modifies both arrangement and proportions, and no skilled draughtsman will neglect such adaptation, especially in respect to moulding cast iron parts, and the accessibility of surfaces to be planed, turned or bored.

The wear upon moving surfaces: jar, concussion, elasticity, momentum, centrifugal force, inertia and many other conditions have to be taken into account, which do not apply to fixed structures, or what may be called static engineering work; and in view of this fact it is strange that no classification exists dividing constructive engineering into static and dynamic branches.

As before remarked, there is in these remarks no intention of disparaging the importance of computed dimensions for machine parts, but to call attention to the impossibility of their application to the extent generally supposed. Mr. W. B. Bement, the founder of the Industrial Works in Philadelphia, who possessed a marvelous ability and perception in machine design, said he always favored computed dimensions because "it generally gave useful suggestions."

Strength of Material.—As before remarked, in all works and structures of a static kind, the strength of material forms a basis for dimensions, physical qualities being also taken into account. The value of material in resisting strains is determined by experiments performed by powerful machines for pulling, compressing and bending. In this way not only is the ultimate strength arrived at, but also the change of structure by elongation, condensation, and permanent set by bending. From the average of a great number of such experiments, constants are assumed that become factors in computing dimensions.

In the construction of machinery the strength of material is one among other conditions that must be kept in mind, and as there are but a few kinds of material employed, its value is generally known and considered. The adaptation of steel, in its multifarious forms and conditions, to the requirements of machine constructions, points, at the present time, to a great and general change of dimensions, also to a modification of implements for cutting and shaping, as will be noted more fully in a future place.

Tables and Formulæ.—Tables of dimensions, speed, and so on, are generally made up from formulæ, that is, the results of experiment are generally stated in that way for conciseness, but formulæ are generally made up or discovered from tabulated results. The two things are merely different forms of presenting the same thing. By noticing the ratios and relations of changes in dimensions and operating conditions expressed in a table, it is generally easy to find an algebraic form covering all cases that are analogous. In an equation, the relative values of the different factors are readily found by transposition, and in this rests the principal value of the method. On the other hand, tables are ready for use and free from the chance of error in calculations, separately made in each case.

Coming now to the present work, its preparation was suggested many years ago by the inconvenience of common references such as are required in common machine practice, and by a belief that some more simple form, adapted directly to use and confined to those things most commonly dealt with, would be of value. The work is made up mainly from personal experience, and is but little more than a classification and reproduction of work constructed. To the objection before named, of not conforming to theoretical practice, or, at least, to what is called theoretical practice, some answer has been already made, and a further reply is, that there is no intention of attacking or controverting what others have laid down from either observations or computation, but to present in the most available form what has been gathered in a long experience, as diversified as the span of a single life can well admit.

J. R.

San Francisco, Cal., 1889.

NOTES, MEMORANDA.

SECTION FIRST.

CHAPTER I.

MACHINE DESIGN.

No better beginning can be made of the subject of machine design than to point out the absurdity of ornament of all kinds, whether of configuration, color or mountings. Such decoration is not only in bad taste, but an evidence of provincialism and generally of a want of skill. There is at this day, happily, a tendency to plain symmetrical forms, the material following as nearly as possible the lines of strain, and an effort to show adaptation. Still one meets with a good deal of the old architectural style of framing in imitation of woodwork. At first machine frames were made of wood, having its strength in the direction of its fibre, consequently disposed in straight lines and rectangles. Wood suggested cabinet ware and house ornament, and it was applied in the way of beads, panels, mouldings and carvings, and to complete the matter machine framing was painted in gaudy colors and varnished so the slightest imperfection in castings became apparent by the reflection of light.

The subject of general design can best be discussed by reference to an example. A single-geared drilling machine has been chosen as one of the most familiar and containing as many "points" as any machine that could be selected.

Another reason for the selection is that drilling machines, although familiar, are not very well understood in respect to the strains the framing has to sustain, and its required sections. We frequently hear remarks respecting the rigidity of drilling machines and their superiority because of heavy sections. This does not apply in so far as thrust in drilling, which is insignificant in comparison to most metal cutting operations, but does apply for some other kinds of work done on these machines.

In drilling, when the drills are supported and guided by their points, a spindle has nothing to do with their guidance, and its rigidity only increases deviation. A drill would in most cases work as well if there were a flexible joint in the spindle, between the drill and spindle-bearing *C*. In boring, cottering, and other work of the kind, rigidity of framing, spindles and other parts, is called for the same as in other metal cutting machines where the stress of the work falls on the bearings and projecting ends of spindles. For this reason the diameter of spindles should be much greater than is required for drilling, their size being no objection until the shells and bearings become too large for high speed.

NOTES, MEMORANDA.

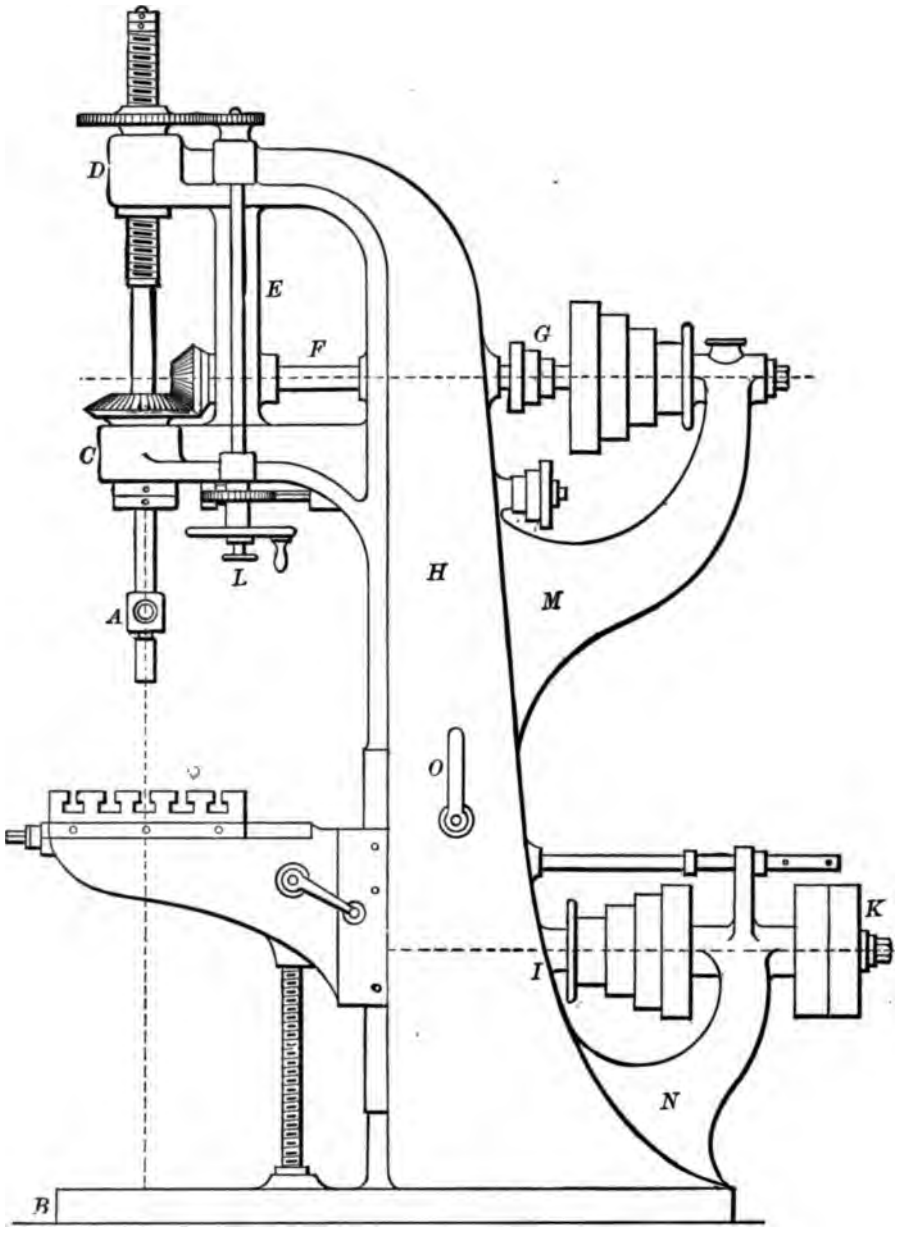

FIG. 1. SINGLE-GEARED DRILLING MACHINE.

NOTES, MEMORANDA.

The driving gearing is placed at the bearing *C* to prevent torsion of the spindle, which would occur if the gearing is placed at the top. The bevel wheels should have a broad face and a fine pitch. In American practice these are commonly made two to one, which is much preferable to mitre wheels. The horizontal driving shaft *F* can run at double the speed of the spindle without objection, and in this way gives the required power for nearly all cases without back gearing. The next point is the projection of the spindle bearings beyond the main column, called the overhang, which must be made to receive the largest pieces to be drilled. This overhang and the bearings *C* and *D* give the first elements for generating the main column *H*. Extending from the bearings *C* and *D* are two brackets on which falls the thrust of the spindle, and unless these brackets are connected, the top one alone receives this thrust. This leads to the strut *E*, placed between, which not only connects the brackets, but furnishes a strong bearing for the shaft *F*, and as may be seen, in no way interferes with the symmetry of the general frame.

Starting from the brackets the main column *H* is designed with graceful curves, and a section not only strong enough to resist the strain of the work, but many times as strong, so as to harmonize with the diameter of pulleys, the overhang, the height of the machine, and other things. There can be no rule here for either proportions or shape, at least none that could be followed without modification in each case. Before completing the main column, the feed and driving pulleys at *G* should be designed, because the position of these to some extent govern the shape of the bottom of the main frame and the curve at *I* where the counter-shaft *K* is mounted on the main column, as shown. The feed-wheel *L* is placed as near as possible to the spindle for convenience, and the starting and stopping handle *O* is within easy and convenient reach. The brackets *M* and *N* grow out of the general design and the purposes they serve. There can be no rule for these, yet there is apparently but one symmetrical shape for them, which may be more or less nearly attained by experiment. These must be cored also, and of box sections, to harmonize with the main trunk from which they spring.

The table at *P* can have no rule. It may consist of a compound slide, a revolving plate, a vice, or a simple fixed flat plate, as the nature of the work may require. Being a projecting bracket to sustain a load, the bracket naturally takes a parabolic form on the bottom, and the length of the slides on the main column will depend on the method of supporting or locking the table.

This very little is all that can be said of the example and its design without including the operating functions of the machine, which it is not the purpose to deal with at all. Balancing the spindle, detaching it from the feed-gearing so as to raise and lower it directly, back gearing, and so on, are problems of function, all applicable to the present or other general design for a drilling machine. The arrangement of gearing shown is the most direct and simple that could be devised, and all the details well confirmed by successful practice.

NOTES, MEMORANDA.

CAST IRON SECTIONS.

Solid and Box Sections.—In respect to cast iron framing, there is one rule of general application; that is, to employ the hollow or box form whenever possible. This happy change from the old rib form, made in imitation of wood framing, was introduced about forty years ago by Whitworth, of Manchester, England, and has steadily gained ground until, at the present time and in the best practice, rib and plate frames are the exception.

In respect to strength for equal weights of metal, comparison between the two methods is almost out of the question; the strength of the hollow section, especially in resisting torsion, is far beyond what computation assigns, while there are many other important advantages gained besides superior rigidity. The same amount of material in a cylinder, or box section, whose outer and inner diameter is 8 to 10, compared with a solid section, is theoretically near three times as strong. The surfaces are available at all points for joining parts without destroying symmetry or strength, and without waste of metal. The metal being disposed in thinner and more uniform sections, is homogeneous and more free from inherent strains. The double skin, one on the inside and one on the outside, gives extra strength, while the thickness or general dimensions can be increased or diminished from the inside, leaving the external dimensions and shape the same. This last is a very important matter.

There is often a mistaken opinion among engineers and constructors of machinery respecting the expense of preparing patterns for box framing, the core boxes being considered as an additional expense. This is not the case, as investigation will show. The cost of core boxes is commonly saved in the diminished cost of the patterns. The patterns themselves are much stronger and more durable; changes are easily made when required, and in moulding there is access to all parts before cores are placed; so that mending and dressing are easily performed.

A careful account of cost, in common or standard kinds of work, will generally show a decreased expense for making and maintaining patterns for cored instead of rib sections. The cost and risk of moulding and casting is something more in the lighter class of work, but this is more than compensated in the saving of material.

Rib and Plate Sections.—In Figure 2 is shown the two most common forms of rib sections, one with the corners slightly rounded and the other semicircular. The proportions shown are suitable for most cases. The general dimensions grow out of the strain to be resisted and the aggregated area. The metal should be distributed as follows, referring to the first diagram: The main member *A* should have thickness one fourth greater than the member *B*, and the web *C* one half

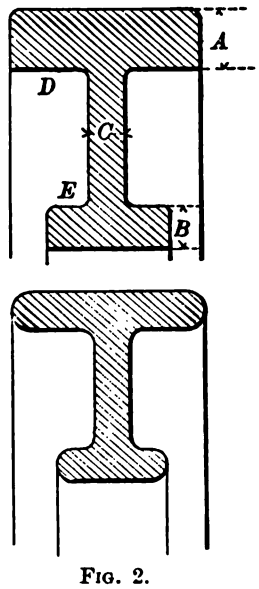

FIG. 2.

NOTES, MEMORANDA.

the thickness of *A*. The depth at *E* and *D* as two to one when there are double ribs. Respecting the plate or web *C* it is, in effect, a brace and not the main part, as is commonly thought and as it is often made, especially in England. It can be thin as the conditions of casting permits, and to avoid cooling strains. The author has sometimes in his own practice reduced these webs to one fourth the thickness of the main member *A*, and found the results satisfactory. All the exposed edges of a casting should be made heavy in proportion to interior webs or parts, not only because of the appearance, but also to avoid cooling strains.

Fillets to look well should have a radius of not less than one half the ribs' thickness, and the round on the outer corners a radius of one sixth of the ribs' thickness; more than this spoils the appearance, unless the semicircular form shown in the second diagram is adopted.

Rounded Ribs.—This form is suitable for light framing, but can very well be dispensed with altogether for ribs exceeding a half inch in thickness, unless it be in cases where the casting has a separate use, and is not directly connected with other and heavier parts. Brackets for supporting light shafts is one case where ribs of the kind are suitable.

These remarks apply not only to the particular sections shown, but to the many modifications of ribs and webs that occur in machine frames; in fact, the disposition of metal in nearly all cases, except the box form, is that of a web reinforced by ribs, or in other words, main members connected by webs.

Hollow or Box Sections.—The two modifications shown in Figure 3 cover most cases where box framing is employed. It was common to make the corners uniform, but in later practice this is changing to the reinforced corners shown in the first diagram. This not only adds a great deal to symmetry and general appearance, especially of columns having projecting brackets on the front, but at the same time meets the requirements of strength and facilitates casting, the thicker section at the corners forming a conduit for the melted metal. The appearance of this form of section is shown in Figure 1, page 13.

The reinforcing ribs should be shallow; their depth not more than two thirds the thickness of the plates, unless for some apparent purpose. Their width to present a symmetrical appearance should be one sixth of the depth of the whole section, or side of which they form a part; that is, two inches broad on surfaces twelve inches wide, and four inches broad on surfaces twenty-four inches wide.

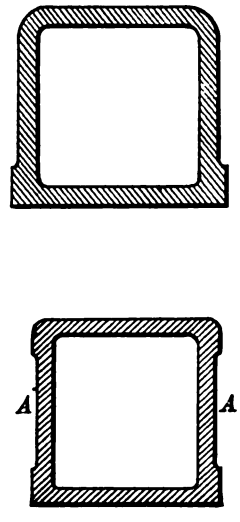

FIG. 3.

NOTES, MEMORANDA.

In the case of vertical framing, having either no taper, or an equal taper on two sides, the corners can be reinforced by ribs at all corners as shown in the second diagram. When the conditions and connections are the same on all sides, then the sides should be uniform, each showing the panel appearance at *A*, *A*. All outer corners should be slightly rounded.

Fly Wheel Rims.—These can for all cases be made of a rectangular section unless employed for driving bands. The form shown in Figure 4 is one of the most symmetrical, and has some constructive advantages. The channels in the sides reduce the amount of surface to be turned off there, and the form harmonizes with frame sections such as have been recommended.

The outer ribs or ledges *C* are made heavier because the mass recedes from the center, and the functions require weight at the perimeter. The dimension *A* is greater than *B*, for the same reason, because it conveys an impression of removal from the center.

The following table, based on the diagram, gives suitable dimensions for such rims.

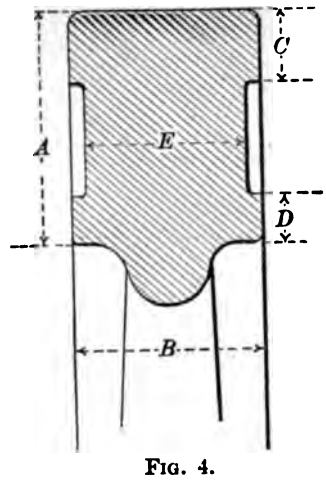

Fig. 4.

Dimensions in Inches.

A.....	2¼	2¾	3½	4	4½	5	5¾	7	8	9½
B.....	2	2½	3	3½	4	4½	5	6	7	8
C.....	⅝	¾	1	1⅛	1⅜	1½	1¾	2	2½	2¾
D.....	½	⅝	¾	⅞	1	1⅛	1¼	1½	1¾	2
E.....	1⅝	2⅛	2½	3	3½	4	4¼	5¼	6	7

Spokes and Struts.—The oval or fish section shown in the first diagram (Fig. 5) is generally employed for spokes of wheels and pulleys. It is the most suitable, and one of those things arrived at by "natural selection."

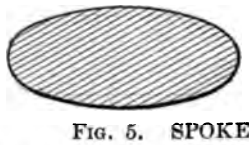

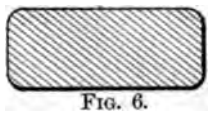

Fig. 6.

Fig. 5. SPOKES AND STRUTS.

It is a section the proportions of which can be changed at pleasure without much altering appearance and symmetry. The long and short axes can have proportions of three to four, two to one, or three to one, as the

NOTES, MEMORANDA.

required strength may demand, so that wheels of different strength can be placed together or in one train and the appearance will harmonize, the breadth of the spokes being uniform. There is also the advantage, in the case of high speed, of the spokes presenting a thin section of wedge form to the air, avoiding resistance and loss of power that is often considerable.

For fixed struts this section is not suitable and never looks well. The plain parallelogram shown in Figure 6, page 17, is preferable. It harmonizes with box sections, and when large enough can be cored the same as the main member. The round on the corners should be slight, not more each way than one sixth of the thin section. Plain rectangular sections are often avoided the same as hollow ones were at the beginning. The "ornamental idea," to so call it, is hard to eradicate in machine design.

Curved and Straight Spokes.—It was once thought essential that the spokes of cast wheels and pulleys be curved or crooked, to compensate cooling strains, and there is in the case of wheels with stiff rims a considerable object gained in that way. For pulleys with thin rims such compensation is not required in the spokes, yet the first use of straight arms was for gear wheels, fly wheels, and so on, having rigid rims.

In modern foundry practice there is no sufficient reason for making curved spokes in any case. They are generally arranged at random in respect to the spokes when mounted, some having the convex face forward and some the concave side, presenting an awkward appearance. There is besides more expense in constructing patterns, and the difference is now mainly between work of the first and second class; the former employing straight and the latter crooked spokes.

When wheels and pulleys are driven at high speed, spokes when straight are an important factor in resisting centrifugal force, which would otherwise fall wholly on the rims, so a wheel is really much stronger in that respect when made with straight spokes.

MACHINE STANDARDS.

A projecting bracket, whether vertical or horizontal, takes a parabolic form on its compression side, or, its required sections produce that form in order to secure the greatest strength with the least material. Machine columns, or standards, have in practice more and more approximated this form until it has become recognized as the most appropriate and pleasing in appearance.

The diagrams (Figure 7) show outlines of the most common form. The first one *A* has a true curve at the top and a developed curve at the bottom. The one *B* has developed curves at both top and bottom, and *C* true curves at each end.

NOTES, MEMORANDA.

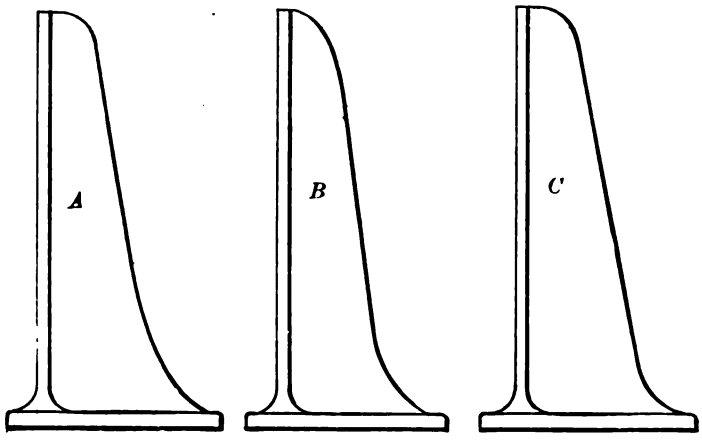

FIG. 7. MACHINE STANDARDS.

In the case of short, heavy frames the form *C* is preferable, especially if the area of the base is limited, or if the frame is mounted on an iron base requiring only ledges for bolting down.

The one *B* is in a measure determined by height and section, and by no means as generally adaptable as the one *A*, with a true curve at the top. It is generally necessary to provide some flat area at the top, which the true curve permits, and the general contour suits for any height or breadth.

The degree of taper in frames or standards of the kind should be made with respect to where machinery is mounted on them, supplementary brackets and so on. In the case of slotting machines, or other machine tools where there is commonly a bending strain near the middle of the column, also when there are many details mounted at the top, the taper should be reduced. When there are no heavy strains, and the main function is to support shafts, wheels and other gearing, the taper can be greater, and the top section reduced accordingly.

Remarks on Machine Frames.—The functions of machines are principally thrusting, pulling and twisting, producing strains corresponding to these names, also, supporting and presenting material to be acted upon. All force exerted must be resisted in the same plane, and as the material acted upon lies in this plane, frames assume in a general way two forms:—one open at the side, corresponding to the letter G; the other surrounding the material, like the letter O, or more often in a rectangular form to better suit the conditions of construction, and give more clearance.

Applying this principle to machine frames it will be a matter of surprise to those who have not before observed it, that all engine frames, those of metal working machines, and, indeed, nearly all, are based on one of these two plans, either open sided or continuous, surrounding of the line of strain.

NOTES, MEMORANDA.

Generalization of this kind in respect to construction may at first seem without an object, but this is not so. It is the base, so to call it, of methodical and successful design and is in the way of bringing this matter in some degree within the realm of exact and uniform practice. It also furnishes proportions and arrangement for irregular frames and the correct distribution of material, or, at least, will do so in a greater degree than any kind of guesswork, or by proceeding upon analogy and copying.

Either for commercial or some other reason not easy to explain, imitations rarely succeed, and our most successful works are those where designs are boldly worked out with some advantage over previous and common practice. It is true that much effort is often expended to attain novelty alone, and such effort is generally lost, as it ought to be; functions, adaptation and cost are the true objects to be kept in view, and it will generally be found that cost declines as the other two elements are more completely and directly attained. The frames for marine engines are an example of this. They are the strongest, lightest and most simple of their class, and the cost of constructing them has all the time diminished, as a better adaptation has been reached.

MACHINE SUPPORTS.

Legs or Standards.—When machine frames, by reason of their length, or other cause, cannot be extended down to foundations, supports or legs are necessary. These have a great deal to do with the symmetry of machinery so mounted, and in some cases with its rigidity.

There are two classes of these supports, one that may be called legs, used almost exclusively in American practice; the other, called standards, employed nearly always in English practice. The legs are to sustain weight only, or to connect a machine frame to its foundations as a strut, while the standards are designed with a view of imparting to main frames the strength or rigidity of the foundations.

It is strange that such diversity of practice should exist, especially as neither method can be called right or wrong without taking into account the kind of machine and the nature of the foundation.

In all machines where the strains are absorbed in the framing, as in lathes, planing machines, and so on, and when legs or supports are employed it is generally unsafe to bolt such supports to the foundations and to a frame, because any settling of foundations would in such cases strain the machine frame. If not bolted down there is then no reason for a broad base below, and the "legs" are preferable; but the best practice is not to follow either extreme, but provide a nearly uniform section throughout, as shown in Figures 8 and 9; one being a high support and the other a low one.

The proportions should of course be modified to suit the weight to be sustained and to conform to the superstructure, hence dimensions cannot well be given. The general design is, however, applicable in nearly all cases for rib frames or box sections with a ledge or plinth at the bottom.

NOTES, MEMORANDA.

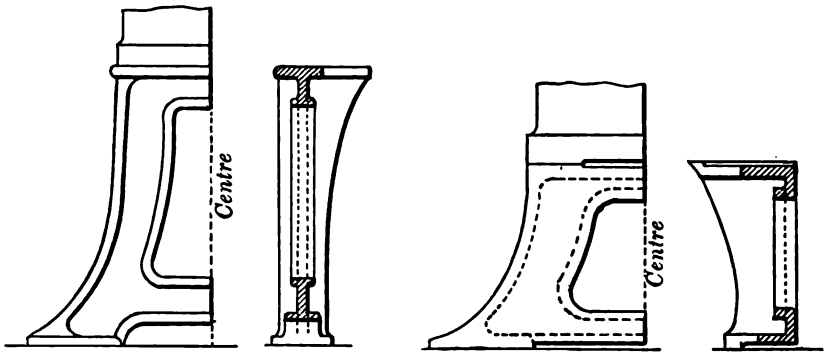

FIG. 8. LEGS OR STANDARDS. FIG. 9.

For plain box frames it is better to employ box supports arranged to convey an impression of the main frame, extending to the foundation.

Further remarks on frame supports will be made in connection with steam engines.

Frame Joints.—A difficulty encountered in designing supports and other bolted-on parts, when the joint is to be concealed, is in having the parts match in dimensions. In the designs, Fig. 8, a half-round bead is shown and answers very well because it harmonizes with the plinth on the main frame; but when a machine is cast in two parts this does not answer, and the most complete method is to employ a flat bead or band as shown at *A* in Figure 10.

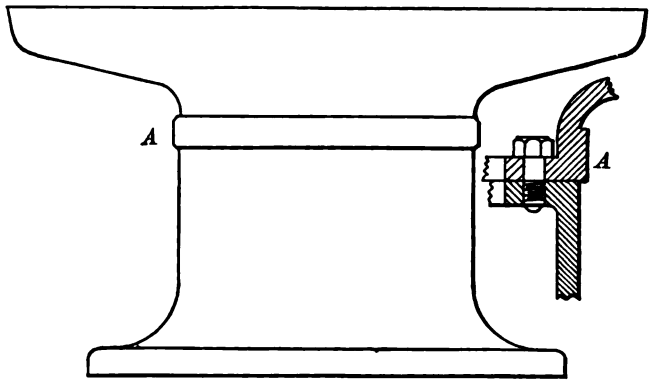

FIG. 10. FRAME JOINTS.

These bands are made to project from three sixteenths to three eighths of an inch, and with width in proportion to size of the machine, three sixteenths by three quarters inch, and three eighths by two inches being examples. The band can of course be either above or below the joint, as the

NOTES. MEMORANDA.

convenience of casting the two parts may determine. When joined in this way there is no appearance of being "built up," and the round corners at the top and bottom of the band conceal irregularity of the vertical faces.

Bosses for Screws and Nuts.—There is no small thing more affects the symmetry of machinery than bosses and washers under nuts and screw-heads. They are sometimes substituted by counter-boring, when flanges are thick enough, but this is in most cases a slovenly method and never looks well.

Referring to Figure 11, the dimension *A* is from one half to one inch for shafts from one and a half to five inches diameter. *C* and *D* are resultants, and will be found in future tables.

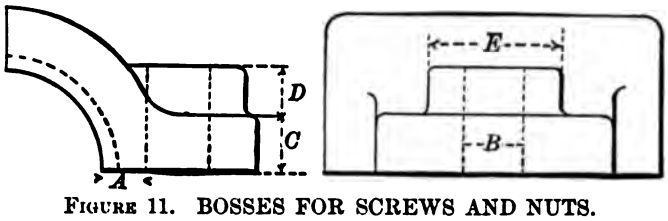

FIGURE 11. BOSSES FOR SCREWS AND NUTS.

B	3/8	1/2	5/8	3/4	7/8	1	1 1/8	1 1/4	1 3/8	1 1/2
E	7/8	1 1/8	1 3/8	1 5/8	2	2 1/4	2 1/2	2 3/4	3	3 1/4

Bosses for Foundation Bolts.—On the base of machine or engine frames the bosses should be larger in diameter, because of the weight of their surroundings and the thickness of flanges and plinths, also because of the holes being cored larger than the bolts. The following dimensions will be found suitable:

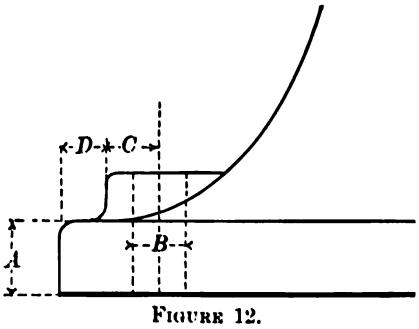

FIGURE 12.

A	1	1 1/4	1 1/2	1 3/4	2	2 1/2	3
B	5/8	3/4	3/4	7/8	7/8	1	1 1/4
C	3/4	7/8	7/8	1	1	1 1/4	1 1/2
D	1/2	3/4	1	1	1 1/4	1 1/2	1 3/4

REMARKS.—The dimension *B* is for bolts; cores should be from one eighth inch to one quarter inch more. The flanges are supposed to be cored beneath whenever their thickness exceeds twice the thickness of the columns or frames. In the case of machine columns the base flanges cannot be made thick enough to look well without coring out beneath, leaving a rim for bearing. This custom is becoming more common in American practice.

NOTES, MEMORANDA.

CHAPTER II.

BEARINGS FOR SHAFTS AND SPINDLES.

Remarks.—Bearings in machinery may be called the "vital" part. On the performances of these depend the main operating qualities of nearly all machines. Steadiness and truth of movement, endurance, and to a great extent, friction, depend upon the quality and proportions of bearings.

They are divided into three classes, Rotary, Reciprocating and Radial. The first includes cylindrical bearings, the surfaces having uniform velocity. The second, flat or parallel surfaces with reciprocating motion; and the third when the surfaces are normal to the axis, and have different velocities, as the distance from the center. There are also roller bearings, pivot bearings, and some others of exceptional use.

Cylindrical bearings are the most extensive and important class, and will be noticed first. Their performance depends upon speed, pressure, area, true cylindricity, and the kind of material employed.

Materials.—The most common materials are alloys of various kinds, cast iron and hardened steel; other things, however, being employed in certain cases, wood for example, when bearings are submerged in water and lubricating with oil impracticable. Metal alloys vary from hard brass and bronze, to soft mixtures of lead and antimony.

The following table contains a list of alloys suitable for bearings:

ALLOYS FOR MACHINE BEARINGS.

	COPPER.	TIN.	LEAD.	ANTIMONY.	ZINC.
Hard Brass for Connecting Rods.	9	1	—	—	1
Hard Brass for Engine Bearings.	32	5	—	—	1
Tough Brass for Links, Eyes, etc.	20	3	—	—	3
Gun Metal for Bearings.....	8	1	—	—	—
Babbitt Metal, (standard)... .. .	1	10	—	1	—
Hard White Metal.....	3	—	—	7	90
Low Grade Lining Metal...	—	—	5	1	—

Besides the alloys named, there are a dozen more that might be included for the softer kinds of lining metals. Their base is lead, the hardening material antimony, and the refining element tin.

NOTES, MEMORANDA.

The smelting establishments prepare various kinds of metal, of more or less merit according to price, sold under the general name of "Babbitt metal," the quality depending greatly upon the amount of tin used in the composition. Alloys containing copper in any quantity cannot be melted in a common ladle, hence are not used in common practice.

A desirable limit of speed for machine bearings is 200 feet per minute, but they may, in extreme cases, be driven at 2,000 feet per minute.

Cast Bearings.—The principal object of soft linings for bearings in the common kinds of machinery is to secure alignment without boring, and is generally an expedient to avoid expense.

Bearings cast in this way answer for ordinary rough work, and when they have but little strain, or strain in one direction, as in the case of line shafts; but where there is much strain, pressure, or high speed, the lining metal, whatever it may be, should be "hammered in" and bored to size.

The hot metal should never, when avoidable, be poured on shafts and spindles that are to run in the bearings, as the shafts are sure to be sprung in some degree, especially when made of steel. Templates of iron do not cost much, and can be a little larger than the shafts when bearings are not bored, or smaller when boring is required. When lining metal has to be cast upon a shaft, as is often the case, a layer of thin paper around the shaft will not only give the right dimensions to the bearings, but will cause the metal to flow freely and give a smooth surface.

The shells, employed as end bearings for counter-shafts, spindles, and so on, should always be tapered enough to permit the easy removal of mandrels or templates, after the bearings are cast. This taper should be from one fourth to one half inch per foot of length; and when the mandrels are removed a good plan is to oil and then drive them again, so as to expand the soft metal and fasten it firmly. The taper permits easier fitting for shafts, and is preferable in every respect.

The preparation and casting of soft-lined bearings is quite an art by itself, and not one workman in twenty is competent to perform this work in a proper manner and without accident. It forms an important part of machine fitting processes in this country, and is deserving of more attention than it has hitherto received in text books and other writings on mechanical subjects, and more than space permits here.

The various bearings and fittings to follow are in most cases for belt or rope transmission. For wheel gearing larger proportions are required, because of the smaller diameter of wheels and gearing, greater strain, and also because of positive motion and limited elasticity.

Bearings for wheel gearing with their supports are nearly always of special construction and do not admit of tabular proportions, but the general elements can be gathered from the present data.

NOTES, MEMORANDA.

Journal Box for Wood Bearings.—Figure 13 shows a journal box, one of the plainest forms, to be mounted on wood.

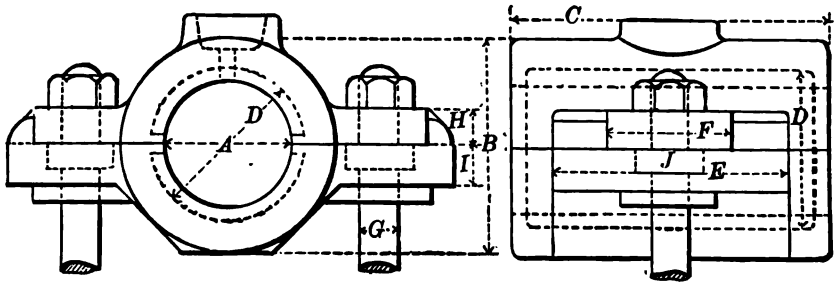

FIG. 13. JOURNAL BOX FOR WOOD FRAMING.

DIMENSIONS IN INCHES.

A	B	C	D	E	F	G	H	I	No. of Bolts.
1	1 7/8	3	1 3/8	2 1/2	1	1/2	3/8	7/16	2
1 1/8	2	3 1/4	1 1/2	2 1/2	1	1/2	3/8	7/16	2
1 1/4	2 1/8	3 3/4	1 11/16	3	1 1/2	1/2	7/16	1/2	2
1 3/8	2 5/16	4	1 13/16	3	1 1/2	5/8	7/16	1/2	2
1 1/2	2 9/16	4 1/2	1 15/16	3 1/2	1 3/4	5/8	1/2	9/16	2
1 3/4	2 7/8	5	2 5/16	3 3/4	1 3/4	5/8	1/2	9/16	2
2	3 1/8	5 1/2	2 7/16	4	2	3/4	9/16	5/8	2
2 1/4	3 1/2	6	2 3/4	4 1/2	2	3/4	5/8	11/16	2
2 1/2	3 7/8	7	3	5	2 1/2	(2) 5/8	5/8	11/16	4
3	4 1/2	8	3 1/2	6	3	3/4	3/4	7/8	4

REMARKS.—The collars on the bolts at *J* are square, and should be one and one half diameter of the bolts across the narrow width. The thickness should be one half of the bolt's diameter. The sockets for these collars should be one sixteenth of an inch larger than the collars, and have plenty of draught at the sides. Oil cups and their covers should be made for fluid oil, or grease, as may be required. For common bearings of the kind, the lining metal can be held by ledges, in the manner shown in the end view. For the better class of bearings holes should be drilled in the sides and bottom, so the metal will become fast by its contraction. The polygonal form at the bottom is to facilitate fitting to the wood.

Rigid Journal Bearings.—Figure 14 shows a rigid journal bearing of what may be called the standard form when lining metal is employed. The proportions given are for substantial bearings, because they are seldom made in large quantities for stock, and the same design may be employed for heavy as well as light duty; one set of patterns answering for all cases. They are suitable for mounting on iron, wood, brick work or masonry, but in the two latter cases should have a plate of iron or hard wood beneath to provide more bearing surface, and permit lateral adjustment when required.

NOTES, MEMORANDA.

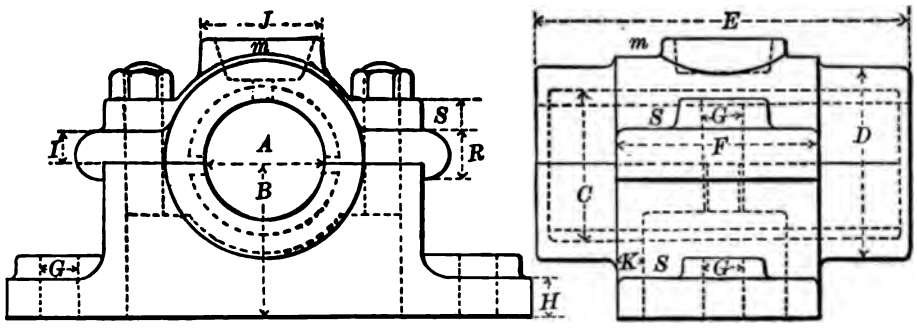

FIG. 14. RIGID JOURNAL BEARINGS.

DIMENSIONS IN INCHES.

A	B	C	D	E	F	G	H	I	J	K
1	1½	1¾	1¾	3	2	⅜	⅜	⅜	1	¼
1¼	1⅝	1⅝	2⅛	3¾	2	½	7/16	⅜	1	⅜
1½	1¾	1 13/16	2⅝	4½	2¼	½	½	½	1¼	⅜
1¾	2	2 3/16	3	5¼	3¼	⅝	½	½	1¼	½
2	2¼	2 7/16	3	6	3¼	⅝	⅝	9/16	1¾	½
2¼	2½	2 11/16	3½	6¾	3¾	¾	⅝	⅝	1¾	⅝
2½	2¾	3	3¾	7½	4	(2)⅝	⅝	⅝	2	⅝
2¾	3	3¼	4	8	5	¾	¾	¾	2	¾
3	3¼	3½	4¼	9	5½	¾	¾	¾	2¼	¾
3½	3½	4⅛	5	10	6½	¾	⅞	⅞	2½	⅞
4	4	4⅝	5½	12	7	⅞	1	1	2¾	⅞
5	5	5¾	6¾	14	8	1	1¼	1⅛	3	1

REMARKS.—The number of screws are two, for bearings up to two and one quarter inches diameter; above that, four screws. The reinforcement of the caps at *m* should be from one sixteenth inch for the first bearing, to three eighths inch for the last one, varying between according to the dimension *A*. The diameter of bosses will be found for this and other cases in the tables on page 22. The depth of the bosses *S*, *S*, will appear in the development of a drawing. The lower bosses *S* should in depth be at least three fourths of *H*. By forming the caps to cover, as at *R*, the pedestal is shortened one diameter of that dimension. The depth of the ledges that "hook over" should be from three sixteenths to five eighths inch for the sizes given.

Heavy Pedestal Bearings.—This class includes heavy bearings from four inches diameter upward. Having planed joints, and in most cases side brasses, they are more complete and expensive than ordinary journal bearings. Their height from the base, and many other elements, cannot be included among classified proportions, but with what is given the development will be easy.

(Drawing next page.)

NOTES, MEMORANDA.

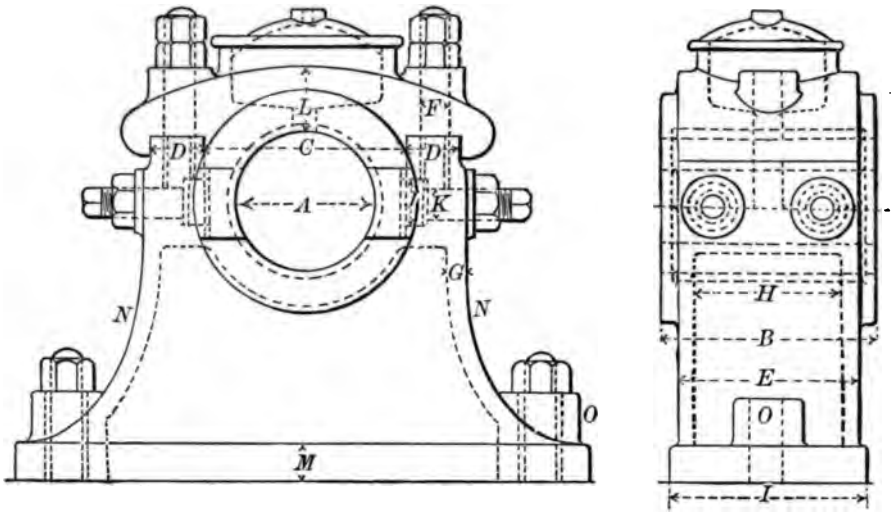

FIG. 15. HEAVY PEDESTAL BEARINGS.

DIMENSIONS IN INCHES.

A	B	C	D	E	F	G	H	I	J	K	L	M
4	6½	5½	2	5	1	⅝	3½	5½	1½	1⅛	2¼	2¼
4½	7	6	2⅛	5½	1⅛	¾	4	6¼	1¾	1¼	2⅜	1⅜
5	8	6¾	2¼	6	1¼	¾	4¼	6¾	2	1¼	2½	1½
6	10	8	2½	8	1½	¾	6	9	1¾	1¼	3	1⅝
7	12	9¼	3	10	1¾	⅞	8	11	1¾	1½	3¼	1¾
8	13	10½	3½	10¾	1½	⅞	8½	12	2	1½	3½	1⅞
9	15	11½	4	12½	1½	⅞	10	14	2	1½	4	2
10	16	12¾	4½	13¼	1¾	1	10½	15	2¼	1¾	4½	2¼
12	20	15	5	17	2	1⅛	14	19	2½	2	5	2½

REMARKS.—In the column *F* there are two bolts to shafts seven inches diameter; above that, four bolts in each bearing. The side brasses or cheeks are set up with screws *K*, but in a manner free from the common objection to this method. The screws are inserted from the inside, and have enlarged ends to give bearing enough to meet all requirements. The recesses to receive these enlarged ends can be cored in the main casting, and the cost of construction is no more than in the case of common set-screws, which should never be employed unless of very large size. The curves at *N* are developed to suit the height and area of base required. (See curves in the chapter on drawing. The bosses at *O* should be at least the depth of the plinth or base flange. Two are preferable for shafts larger than five inches in diameter. When the caps become heavy the oil box can be made rectangular to remove useless metal, and is preferable in that form for bearings exceeding five inches in diameter.

When pedestal bearings of the present kind are made without side brasses, or with a half shell on top, the transverse dimensions can be reduced, and should always be as small as possible. For mounting on masonry a sole plate should be used. This is generally required for the lateral adjustment of shafts.

NOTES, MEMORANDA.

Diagonal Pedestal Bearings.—These are often required where there is horizontal thrust, as in the case of engine shafts. They are much less expensive than pedestals with side brasses, and when parted on an angle of 60°, as shown in the diagram, answer quite as well for small shafts. They are rarely made in a form that can be considered symmetrical, and call for considerable care in developing the curves and general contour. They are commonly lined with white metal, which should always be hammered in and bored. The general design is, however, equally adapted for seats of brass.

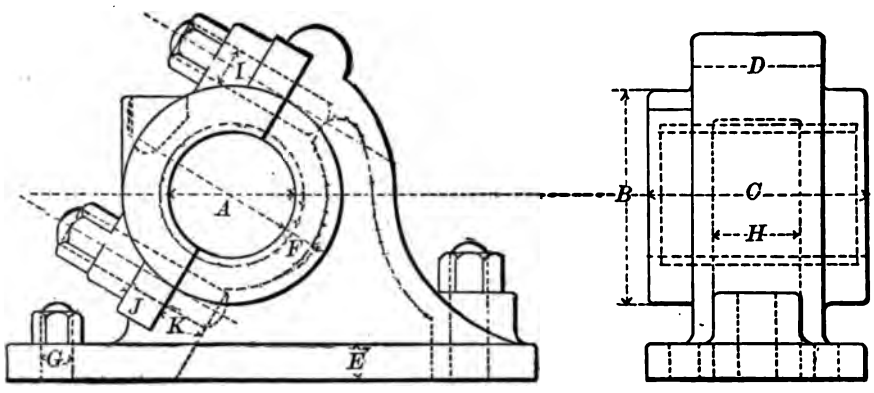

FIG. 16. DIAGONAL PEDESTAL BEARING.

DIMENSIONS IN INCHES.

A	B	C	D	E	F	G	H	I	J	K
2½	4	6	3	1	¾	¾	2¼	¾	¾	1
3	4¾	7½	3½	1⅛	¾	⅞	2½	⅞	⅞	1⅛
3½	5½	9	4½	1¼	⅞	1	2¾	1	1	1¼
4	6¼	10	5	1⅜	⅞	⅞	3¼	⅞	1⅛	1¼
4½	7	12	6	1½	1	⅞	4	⅞	1¼	1½
5	7¾	13	7	1⅝	1	1	5	1	1⅜	1½
6	9	15	7½	1¾	1⅛	1	5½	1	1½	1¾
7	10½	16	8	1⅞	1⅛	1¼	5¾	1¼	1⅝	2
8	12	20	10	2	1¼	1¼	7½	1¼	1¾	2¼

REMARKS.—In the columns G and I there are two bolts for shafts to four inches diameter, above that, four bolts. In the case of crank shafts, where there is severe strain, the column I should be taken one dimension in advance of the table, making the bolts one size larger. Bearings of this kind require abutment at the ends of the base plates, unless held by fitted bolts on planed iron seats.

NOTES, MEMORANDA.

PIVOTED SHAFT BEARINGS.

Pivoted bearings were made and introduced, in his own work, by John P. Bodmer, of Manchester, England, forty years ago; and more generally and completely in the United States, by Messrs. William Sellers & Co., of Philadelphia, thirty years ago. Their present place in machine practice is an example of the time required to introduce any improvement, the purpose and merits of which are not obvious at first sight. Even at this day the object and value of pivoted bearings is but little understood, and the advantages of the system have generally to be demonstrated by experiment before people will purchase and employ them.

If shafts were made exactly true, and not deflected in use, there would be no object in pivoting bearings, except to equalize pressure on the bearing surfaces; but line shafts are not made true, and cannot be so made within the limits of their present cost, or by methods employed. Any one who doubts this can be convinced by "feeling" a pivoted bearing on any line shaft, and detecting the lateral movement. Pivoted bearings are therefore to permit greater length of bearings, and a corresponding reduction of pressure on their surfaces, also to insure a fit under all circumstances.

The short bearings employed in European practice are a necessity of the rigid system, because, however true a shaft may be, the lateral deflection caused by bands, gearing, and want of alignment, makes long rigid bearings impossible. The same reason prevents the use of hard material, hence we see all kinds of bearings lined with brass or other soft alloys.

At first the added expense of constructing pivoted bearings was an obstacle to their introduction, but by degrees the spherical seat has become so simplified and so easy to make, that the cost of such bearings is not much more than for well fitted rigid ones, and is even less in some cases, if material is considered, because a rigid bearing, as before explained, requires brasses or other lining metal, while pivoted ones can be made of cast iron.

The remarks respecting the cost of spherical pivoting apply also to other crude and unsafe ways of accomplishing the result by means of point screws and gimbal gearing; but the ball and socket method is cheapest when there are proper designs and implements for boring, tapping, and so on.

The plans here shown are taken from designs made by the author in 1878, for one of the principal engineering firms in England. These designs included the implements for preparing the bearings, and their low cost was a matter of astonishment.

Lubrication.—There is no doubt that lubrication with fluid oils is preferable when the feed or distribution can be controlled to prevent waste. The amount consumed is generally ten times what is required when oil is poured on bearings at intervals, and this method is not to be considered. Adjustable feeding cups for fluid oil, and safety cups filled with some melting compound, is the most complete arrangement that can be recommended for line shafts.

NOTES, MEMORANDA.

NOTES, MEMORANDA.

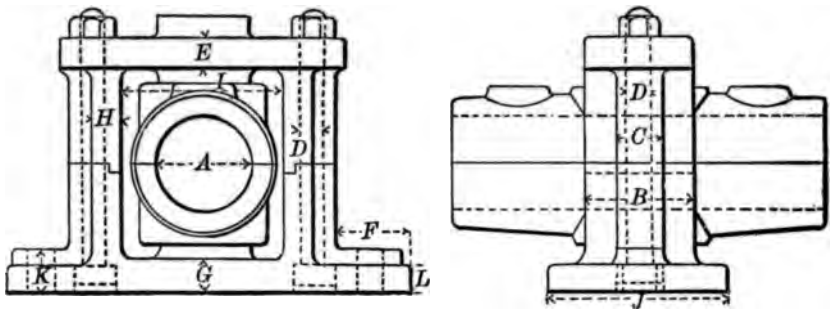

FIG. 18. OPEN FRAME PEDESTAL.

DIMENSIONS IN INCHES.

A	B	C	D	E	F	G	H	I	J	K	L
1½	2	1¼	½	⅝	2	¾	9/16	2¾	3	¾	½
1¾	2¼	1½	⅝	¾	2⅛	⅞	⅝	3⅛	3½	⅞	½
2	2½	1½	⅝	¾	2¼	⅞	⅝	3½	4	1	⅝
2¼	2¾	1¾	¾	⅞	2⅜	1	11/16	4	4½	1⅛	⅝
2½	3	1¾	¾	⅞	2½	1	¾	4¼	5	1¼	¾
2¾	3¼	2	⅞	1	2¾	1⅛	⅞	4⅝	5½	1⅜	¾
3	3½	2	⅞	1	3	1⅛	1	4⅞	6	1½	⅞
3½	4	2½	1⅛	1⅛	3½	1¼	1⅛	5¾	7	1¾	1
4	4½	2¾	1¼	1¼	4	1½	1¼	6¾	8	2	1⅛

REMARKS.—The pivots or sockets require a loose fit when the clamp bolts are screwed down hard. This makes a difficult adjustment in fitting which is generally done by experiment. The surfaces of the ball and socket require trimming. A tolerable job can be done by making careful patterns for the bearing, and leaving the convex rough, but is best to shape the surfaces with a tool, or turn them.

Adjustable Pivot Bearings.—The vertical adjustment of bearings for line shafts is a great convenience, not only in erecting shafts, but to keep them level when buildings or floors settle and change. Lateral adjustment is not so much required, and may be disregarded in mounting the shells. The requirements are free movement in two planes, and adjustment vertically.

In the drawing to follow, the shells in which the stems are mounted are all that require dimensions. These can form a part of any kind of support, for walls or ceilings. The stems are inserted from the inside. This reduces the amount of boring, and gives a neater appearance. A bracket of this kind can be drilled, bored, and tapped at one setting, on a common drilling machine.

NOTES, MEMORANDA.

NOTES, MEMORANDA.

REMARKS.—Any dimension wanting here may be found on page 30, the shells being the same. The arrangement shown answers for wall and post brackets, also for open-side suspension brackets or frames. The clearance at *a* should be from one eighth to one fourth inch, increasing from the smallest to the largest bearing in the list. The set-screws *H* should be drilled to receive oil cups. The cavity at *F*, if filled with waste or other fibrous packing, retains and distributes the oil. The grease cups *e*, *e*, are to contain grease or tallow that will melt, in case lubrication fails and the bearings become hot. The grease should be piled so it can be seen. Dust will collect on it, but this cannot be helped and does no harm. Covers are inconvenient. When lining is employed, in the case of high speed or heavy pressure, the dimension *C* should be increased from one eighth to one fourth inch.

Suspension Brackets.—These are made under a great variety of forms, and in many cases with scant attention to sections and strains. In the case of regular manufacture of shaft fittings, rib sections are preferred because of the greater convenience of moulding, the cost of patterns being a small consideration. Figure 20 shows a good example of rib section practice, one adopted by some of the principal and best makers. The patterns being expensive, and not likely to be adopted for general purposes, dimensions will not be carried out farther than already furnished in the preceding tables.

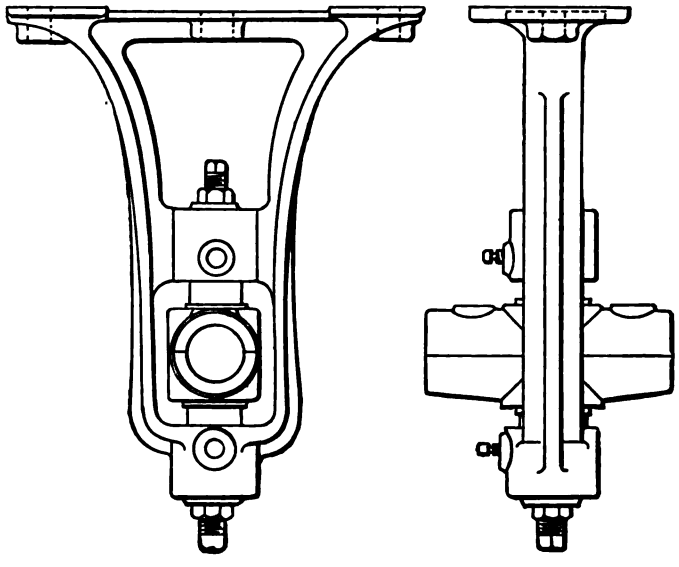

FIG. 20. SUSPENSION BRACKET, RIB SECTIONS.

With pivot bearings that can be swung enough to put on or take off pulleys, and when compression couplings are used, there is but little objection to enclosed bracket frames, especially when shafts are made in lengths, so that there is but one bearing to each piece. For general purposes, however, and when brackets are furnished with other fittings of the common kind, it is better to have open frames, so shafts may be lifted out and put in at the side.

NOTES, MEMORANDA.

Open-Side Brackets.—The superior rigidity of cored sections is a strong reason for their employment for the main member of suspension brackets. The present design is drawn in that manner, so a single core box will answer for the whole and form a cheap and durable pattern. The combination of ribs and cores is seldom expedient, and does not, in most cases, present a symmetrical appearance, but these brackets form an exception and look well, besides, are extremely strong.

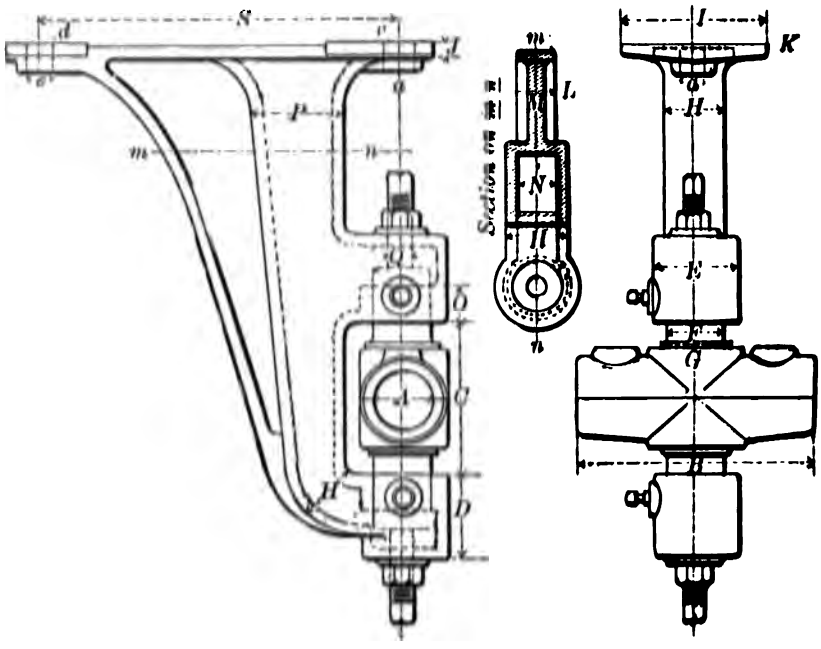

FIG. 21. OPEN-SIDE SUSPENSION BRACKET.

DIMENSIONS IN INCHES.

A	B	C	D	E	F	G	H	I	J	K	L	M	N	O	P	Q
1 1/8	6	4 1/8	2 1/8	2 1/8	1 1/8	1 3/16	1 3/4	4	1/8	3/16	1	5/16	1	1	2 1/4	5/8
1 3/4	7	5	2 3/4	2 3/4	1 5/8	1 11/16	2	4 1/8	3/16	3/16	1 1/16	3/16	1 1/4	1 1/16	2 5/8	3/4
2	8	5 1/8	3 1/8	3	1 7/8	2 5/16	2 1/4	5	5/16	3/16	1 1/4	3/16	1 1/8	1 1/4	3	7/8
2 1/4	9	6	3 3/8	3 1/4	2 1/8	2 5/16	2 1/4	5 1/8	5/16	1/8	1 3/16	3/16	1 1/8	1 3/16	3	7/8
2 1/2	10	6 1/2	3 5/8	3 5/8	2 3/8	2 5/8	2 1/2	6	11/16	1/4	1 1/8	1/8	1 5/8	1 1/8	3 3/4	1
2 3/4	11	7	4	3 7/8	2 1/2	2 3/4	2 3/4	6 1/2	3/4	5/8	1 3/4	1/8	1 3/4	1 5/8	4 1/8	1
3	12	7 1/2	4 1/4	4 3/8	2 3/4	3	3	7	13/16	5/8	2	5/8	2	1 3/4	4 1/8	1 1/8
3 1/2	14	8 1/2	5 1/4	5 1/4	3 1/4	3 3/4	3 1/2	8 1/2	7/8	5/8	2 1/4	5/8	2 3/8	2 1/4	5 1/4	1 1/4
4	16	9 1/2	6	5 3/4	3 3/4	4 1/4	4	10	1	3/4	2 1/2	3/4	2 3/4	2 1/2	6	1 3/8

(CONTINUED.)

NOTES, MEMORANDA.

REMARKS.—As these brackets are made of different length, or drop it is called, some of the dimensions have to be varied accordingly. The column I, for example. The dimension S is usually made equal to the drop or projection of the bracket from its foot to the center of the shaft. The diagram is arranged for a drop or projection of five to eight diameters of the shaft. The following table will supply some dimensions omitted in the previous one:

SUPPLEMENTARY TABLE.—OPEN-SIDE BRACKETS.

Diameter of Shafts, inches	$1\frac{1}{2}$	$1\frac{3}{4}$	2	$2\frac{1}{4}$	$2\frac{1}{2}$	$2\frac{3}{4}$	3	$3\frac{1}{2}$	4
Diameter of Bolt, *a*.	$\frac{5}{8}$	$\frac{5}{8}$	$\frac{3}{4}$	$\frac{3}{4}$	$\frac{7}{8}$	$1\frac{1}{8}$	$1\frac{1}{4}$	$1\frac{3}{8}$	$1\frac{1}{2}$
Diameter of Bolt, *c*. .	$\frac{1}{2}$	$\frac{1}{2}$	$\frac{5}{8}$	$\frac{5}{8}$	$\frac{3}{4}$	$\frac{7}{8}$	1	1	$1\frac{1}{4}$
Length of Foot, *e*	3	$3\frac{1}{2}$	4	4	$4\frac{1}{2}$	$4\frac{3}{4}$	5	6	$7\frac{1}{2}$
Length of Foot, *d* ..	$2\frac{1}{4}$	3	3	3	$3\frac{1}{2}$	4	4	$4\frac{1}{2}$	$5\frac{1}{2}$

When shafts exceed three and one half inches diameter it is better to employ pillow blocks, or pedestal bearings mounted in stirrup frames.

Counter-Shaft Brackets.—The present is one of a great number of designs made by the author in his own practice. It has proved itself one of the best, and in making up requires only boring the shell and fitting one screw. The design demands good patterns for the shell and concave seats, and careful moulding, but causes no trouble when made in the usual course with other castings. With the proportions given, these brackets cannot be broken by winding belts of common width.

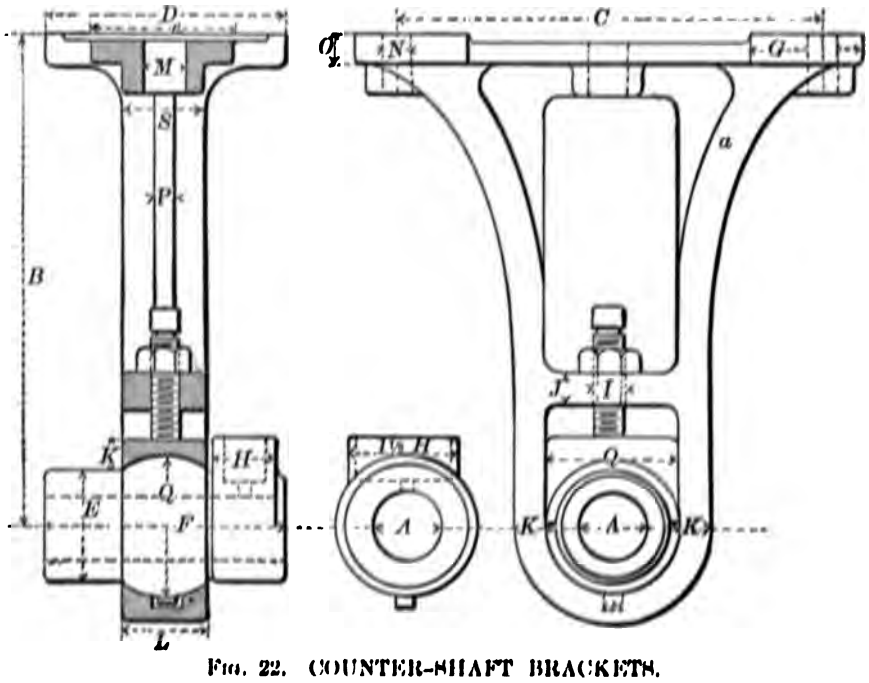

FIG. 22. COUNTER-SHAFT BRACKETS.

NOTES, MEMORANDA.

Pivot bearings are almost indispensable for counter-shafts. It saves half the trouble in erecting them, and provides for strain, high speed and other unfavorable conditions under which such shafts have to operate.

DIMENSIONS IN INCHES.

Diam. of Shafts.	A	B	C	D	E	F	G	H	I	J	K	L	M	N	O	P	Q
1¼	1	8	7	4	1⅝	4	2½	1⅛	½	⅝	¾	1¼	¾	11/16	7/16	⅜	Resultants of E and L.
1⅜	1⅛	10	9	4½	1¾	4½	2¾	1¼	½	11/16	⅞	1⅜	⅞	11/16	½	⅜	
1½	1¼	12	11	5	2 1/16	5	3	1⅜	⅝	¾	1	1½	1	13/16	½	7/16	
1¾	1⅜	14	13	5½	2¼	5½	3½	1½	⅝	13/16	1 1/16	1¾	1⅛	13/16	9/16	½	
2	1⅝	16	14	6	2½	6	4	1¾	¾	⅞	1⅛	2	1¼	15/16	⅝	9/16	
2¼	1⅞	18	16	6¾	2⅞	7	4½	1⅞	¾	⅞	1¼	2¼	1⅜	15/16	11/16	⅝	
2½	2	20	18	7½	3⅛	8	5	2	⅞	1	1⅜	2½	1¼	1 1/16	¾	¾	

REMARKS.—The oil boxes *H* are for grease, and may be covered when there is much dirt. Oil grooves should be cut in the top of the bearings. Such grooves should be nearly square, not wide and shallow as is common. The shells are heavy enough to be lined with soft metal, if it is made thin; one eighth inch in the first, and three sixteenths inch in the last size will do if the shells are warmed when the metal is cast. The column *N* is for drilled holes. The main ribs should increase one fourth in thickness from *K* to *a*, and taper one inch in twelve from *K* to *S*. The dimension *e* can be one half of *D*. The dimension *B* is assumed as an average one; there is seldom occasion to vary this, because blocks can be used to increase the projection, when required to clear large pulleys.

Tapered Bearings.—For the ends of shafts, and where bearings are fastened rigidly, the form of bearings shown in Figure 23 is preferable to any other. They are especially suitable for the shafts of idle pulleys, for tightening bands; also where the shafts or spindles are frequently changed, as in the case of emery wheels.

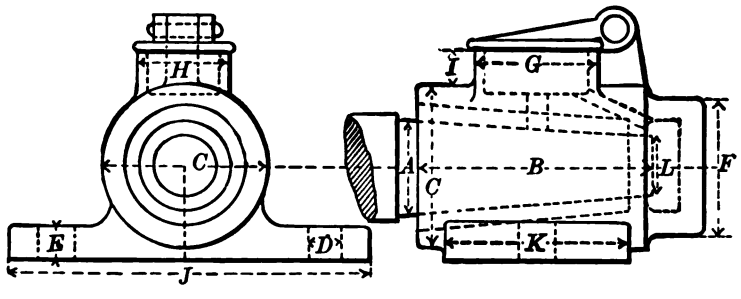

FIG. 23. TAPERED BEARING.

(CONTINUED.)

NOTES, MEMORANDA.

NOTES, MEMORANDA.

REMARKS.—The boxes should be of hard brass, with flanges thick enough to prevent them from springing. It is better to avoid a bearing at the corners *a*. In all bearings of this class the fit should be secured by scraping. As the screws take the principal strain they should be long and well fitted. Some extra metal around bearings of this class seems to add to their stability and good performance.

Solid Spindle Bearings.—This name is applied to bearings or shells not split; compensation when wanted being secured by adjustment endwise of the spindle or bushes. It is not unusual to find bushes of this kind fitted into tapering holes and split, the purpose being to secure adjustment of the bearings by moving the bushes. No adjustment endwise of a bush conical on the extension surface is possible, and the arrangement is a fallacy. Further explanation of this will be made in connection with compression shaft couplings. The example (Figure 26) is for a lathe or other spindle of the kind.

This method of mounting a spindle is better in most cases than with split bearings. There is more rigidity, and as wear is taken up concentrically a spindle always keeps its position. A spindle hardened, ground and fitted in hard bearings of this kind seldom requires adjustment and will last a lifetime without appreciable wear.

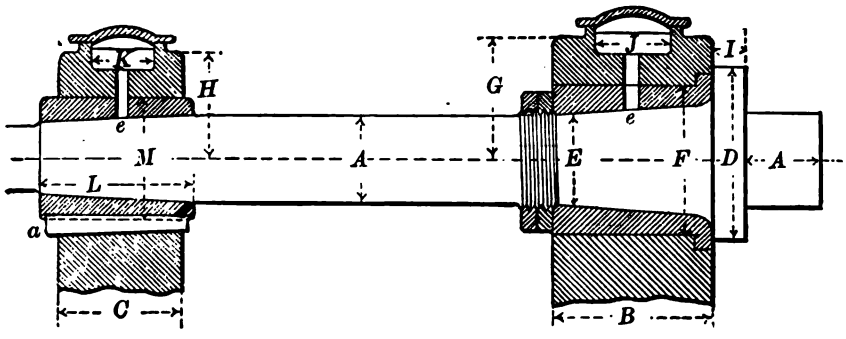

FIG. 26. SPINDLE WITH SOLID BUSHES.

DIMENSIONS IN INCHES.

A	B	C	D	E	F	G	H	I	J	K	L	M
1¼	2¼	2	2½	1⅜	2⅜	2¼	1⅞	7/16	1¼	1	2¼	2¼
1½	2¾	2⅛	3	1¾	2¾	2⅝	2⅛	½	1⅜	1⅛	2½	2½
1¾	3¼	2⅜	3⅜	2	3¼	2⅞	2½	⅝	1⅝	1¼	2¾	3
2	3¾	2¾	3¾	2¼	3¾	3¼	2¾	¾	1¾	1⅜	3¼	3¼
2½	4	3	4½	2¾	4⅜	3¾	3¼	⅞	2	1½	3½	4
3	5	3½	5½	3¼	5¼	4¼	3¾	1	2½	1¾	4¼	5
4	7	4	6½	4⅜	6½	5¼	4¾	1¼	3	2	4¾	6

REMARKS.—The taper of the bearings is uniform; three fourths inch to one foot on the sides, or one and one half inches to the foot by diameters. The rear shell is generally fastened by a set-screw, but a key beneath, as shown, is better and not so liable to spring the shell.

NOTES, MEMORANDA.

Schiele Bearings.—These bearings are to resist end thrust, and are much less understood and applied than their merits demand. They are sometimes called the bearings of equal tangents, and involve a principle not applied elsewhere; that is, the velocity of the surfaces corresponds to their angle with the axis of rotation, and if wear takes place in proportion to movement, exact compensation follows.

It is said Mr. Schiele, the inventor, detected the form by observing the shape of worn steps, which always approximate the curve shown in the diagram. He then proved the correctness of his conjectures by revolving pieces of friable material, such as chalk and soft stone, together, boring one into the other, and found the surfaces assumed the form below.

Any section of the bearing, from the collar *a* toward the end at *e*, can be applied in cases where the whole length is not admissible. Collars on shafts, for example, can be made with their faces conforming to the Schiele curve and give much better results, under heavy thrust, than radial faces. The parabolic curve of these bearings is easy to draw.

The geometry of the Schiele curve has sometimes been mystified by a mass of mathematics, but it is easy to see that an "approximation" is near enough for all practical purposes. Figure 27 shows a diagram for the purpose, also a complete step of the kind.

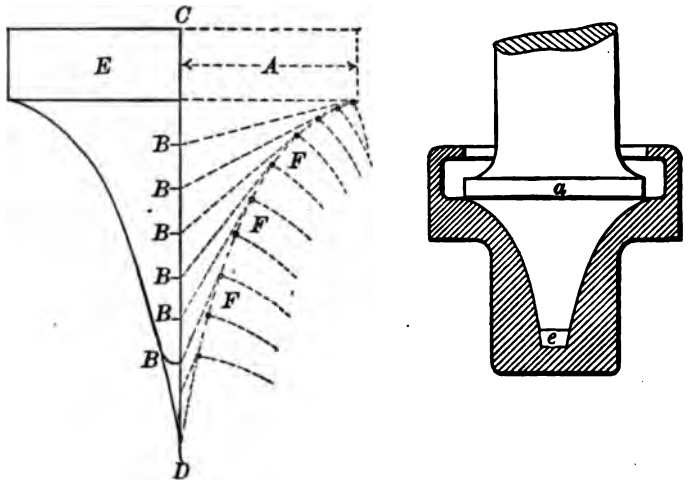

FIG. 27. SCHIELE BEARING.

To GENERATE THE CURVE.—After the dimension *A* is determined, divide the axis *C, D*, into a convenient number of equal spaces, *B, B, B*; then set the compasses to the dimension *A*, and then from the points *B, B*, intersect the preceding tangential lines drawn from *B* to the last intersection of *F*. This produces the points at *F* in the path of the curve. The greater the number of the points *B*, the more clearly the curve will be defined, but as many as shown are enough, when there are proper curve patterns to connect the points.

NOTES, MEMORANDA.

CHAPTER III.

SLIDING BEARINGS.

Remarks.—Sliding or flat bearings have several features differing from rotary ones. The velocity of the surfaces is uniform; the motion reciprocating, and lubrication more difficult. Their velocity of movement rarely exceeds 500 feet per minute, while rotary bearings are often driven at 2,000 feet per minute.

Flat bearings seldom cause trouble when the fitting is good, but to avoid expense, and often necessarily, the surfaces are not prepared so well as those of shafts and their bearings. The very important process of grinding has not until recently been applied to flat surfaces, hand scraping, or planing alone, being relied upon.

Gib Joints.—These form a considerable part of sliding bearings, especially for the guidance of cutting operations for metal and wood. Figure 28 illustrates the common method of diagonal gib joints, made usually at angles of either thirty or forty-five degrees. Proportions for these joints are so variable, in order to meet various conditions of use, that it is difficult to give a table of any value. The following proportions will, however, meet most cases:

$a = \frac{5A}{4}$ or thicker.

$b = \frac{6A}{5}$ or thicker.

$c = 2A$ or wider.

$d = \frac{A}{5}$

$e = \frac{A}{4}$ to $\frac{A}{2}$

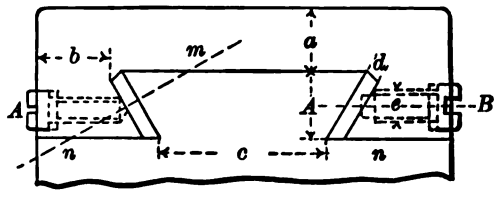

FIGURE 28.

Angular Gibs.—There is shown at the two sides different methods of arranging the adjusting screws. The one at *A*, with an angular point, is correct, and the one at *B*, with flat end, is wrong. The screw *A* exerts its power on the line *m*, pressing the surfaces together at *n*. The one at *B* exerts its force parallel to the faces at *n*, and by forcing the gib into the corner opens the joint at *n*, defeating the very purpose intended. This method is not unusual in practice, and is an example of how errors in small things escape attention. It is also common to make gibs with an angular edge at *d*. This, besides causing more work in fitting, weakens the sliding plate, and has no useful object.

NOTES, MEMORANDA.

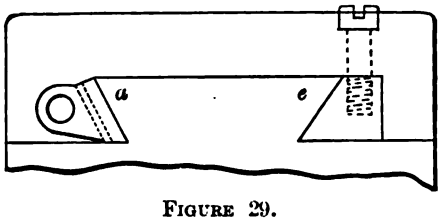

FIGURE 29.

Gib Wedges.—Either of the methods shown in Figure 29 is preferable to the set-screw plan. The one at *a*, consisting of a wedge the whole length of the joint, or two wedges, one at each end, can be applied in nearly all cases and is reliable in every way. There is full contact of all surfaces, and the rigidity of the joint is not impaired by the gib.

The one at *e* is also reliable, but not so rigid as the other and requires more width for the saddle, which is frequently objectionable.

No proportions for this joint need be given, further than are furnished in Figure 28.

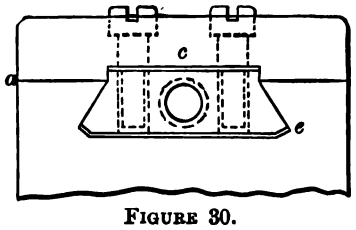

FIGURE 30.

Tool-Slide Joint.—The diagram, Figure 30, shows a king of joint, designed by the author, and employed very successfully for the cross slide of engine lathes. Twisting strains are successfully resisted because of the width between the fulcra at *a* and *e*, and the surfaces are well protected from chips and dirt. Some layers of thin paper are placed in the joint at *c*, so the screws can be set up hard and leave means of compensation. In ordinary cases, however, this is not required, if the joint at *c* is left a little open.

Ledge Gib.—Figure 31 shows a method of mounting slides on ledges, with a wedge and bottom plate. This furnishes compensation in all directions, with large wearing surfaces, and makes a very rigid joint. It, of course, involves more fitting and expense than the common angular joint, but is far superior to either under heavy strain, especially on the line *a*, *e*, as in the case of lathe carriages with feeding mechanism at one side. For lengths exceeding eighteen inches it is better to employ two wedges, one at each end.

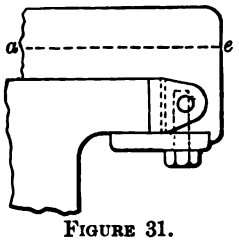

FIGURE 31.

NOTES, MEMORANDA.

Angular Ways.—This method of mounting carriages is suitable when nothing more than weight is required to hold them down. It produces a true, steady movement in such cases, but is not at all suited for many places where it is employed on machine tools. On engine lathe carriages, for example, it is suited only for turning, and so long as the strains are downward, and the gravity of the carriage will keep it down against the thrust of the feed mechanism at the side. It is easy to see that strain in the line *a*, *e*, falling on the angle at *c*, will tend to raise the carriage, and does so, to the limit of its play. Gibs are of but little use, because the small amount of bearing surface soon permits the carriage to wear down at certain places, so there is practically no support vertically except gravity. It is unfortunate there is so little stability in these joints, because so long as the strains do not lift the carriages the movement is perfect, in a vertical plane at least.

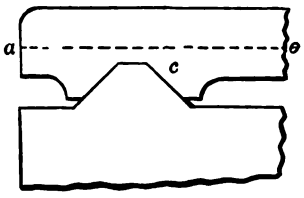

FIGURE 32.

Inverted Angular Ways.—Figure 29 shows the kind of ways commonly employed for metal planing machines, giving a good result in that case, because always kept in place by the gravity of the table or platen. There is the objection to these ways that they are generally cut or abraded, owing to unequal stress on the faces, by fitting, or from other cause. Some makers of planing machines have adopted ways as shown in Figure 34, with good results.

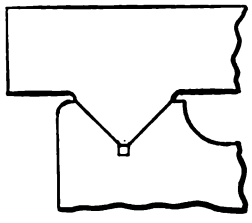
FIGURE 33.

Rectangular Ways.—The first planing machines fitted in this way, for very severe duty, were made ten years ago, and the method is gradually extending among the best makers.

The gib piece *a* is employed at one side only, and is tapped to receive the screws *e*. In case of any wear sidewise, paper packing is laid behind the piece *a*, which is always screwed up firmly.

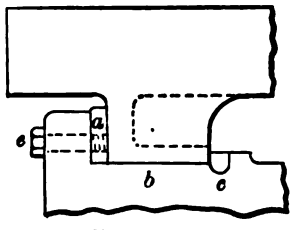

FIGURE 34.

A table mounted in this manner will never leave its ways with side thrust, as those in Figure 33 will do, and there is the further advantage of increasing the surface at *b* to any extent. The groove at *c* is to retain oil. No abrasion has occurred with ways of this kind. The expense of the present, or any other method of making ways that are scraped and fitted, depends on the area of the surfaces in contact. This should be kept in mind in comparing one method with another. Small angular ways are in most cases an expedient of cheapness, and to avoid the expense of fitting.

NOTES, MEMORANDA.

Cutter Bar Guides.—Figure 35 shows the manner now commonly followed, of mounting the cutter bars or rams of shaping and slotting machines, also in other cases where cutter bars are projected beyond their supports. The objections to the screws *a* are to some extent obviated by the gib piece being firmly bolted down; still, an angular joint, for some reasons, is preferable. On the whole, there is in good practice a gradual departure from angular faces for sliding bearings, and it is possible that such faces will be nearly abandoned in future practice. Rectangular slides involve more and better fitting, but this goes for little with the present resources for performing accurate work.

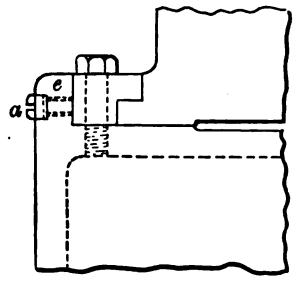

FIGURE 35.

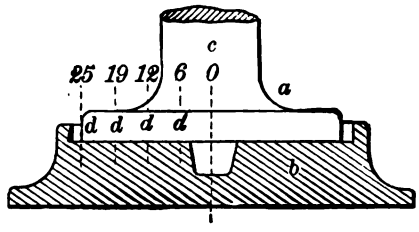

FIGURE 36.

Radial Bearings.—These bearings with their surfaces moving at different velocities, are one of the worst things to contend with in construction, and are responsible for a great share of the difficulties in operating machines. It is an ignorance or disregard of this principle that has led to a great waste of time and effort expended on rotary engines and rotary pumps.

The diagram, Figure 36, is drawn to illustrate the principle of radial bearings. It is an exaggeration of actual practice, but corresponds in operation to collars, end bearings, and so on. The disc *a* is supposed to revolve on the seat *b*. If the disc *a* on the shaft *c* is eight inches diameter, the velocity at different distances from the center will be approximately as the figures on the lines *d*, varying from 0 to 25.

Now, supposing wear to take place as the velocity, or the distance moved, and that such wear—even one thousandth part of an inch—will relieve pressure, it is easy to see that the pressure will not be distributed equally but will begin at the center and increase there until the faces are destroyed. With this in view it is easy to understand how radial faces in pumps and engines cannot be kept steam or water tight. The velocity being directly as the length of radius, it is obvious that thrust bearings of all kinds, with radial faces, should consist of shallow collars in order to secure a more uniform velocity of the surfaces.

(CONTINUED.)

NOTES, MEMORANDA.

Modern thrust bearings for propeller shafts are an example. Every attempt to receive this enormous pressure on faces with long radii, or wide faces, was a failure. End screws or points equally so, because of the small surface. The Schiele bearing being too large in diameter, and not understood in most cases, the natural result followed. The radius or depth of the collars was reduced to one eighth part of the whole radius, and the number of collars increased until the pressure on the aggregated surfaces fell within a practical working limit. This done, there has been no further difficulty in resisting a thrust equal to five thousand, or even ten thousand, horsepower. The same rule applies everywhere and in all cases, either the surfaces must have short radius or else they must conform to the curve of equal tangents shown in Figure 27, otherwise they are soon destroyed.

A study of this subject is commended to the inventors of rotary engines and pumps, also to any one who designs machinery involving radial faces to receive pressure, or to retain liquids or gases.

General Remarks.—There has always been, and no doubt always will be, things connected with bearings not explainable, especially in the case of high speed. For example, a spindle mounted in bearings made of fine grain stone, or any fine abrading material, "glaze" and operate very well until oil is applied, then the metal is cut away at once. It is the same as an oil stone for sharpening tools. In Sweden, saw mill shafts are sometimes mounted on bearings of granite, the metallic "scale" formed on the stone preventing abrasion.

The author once constructed a spindle of seven-eighths inch diameter to run at 10,000 revolutions a minute, in bearings of an alloy composed of tin, antimony and lead; also another spindle at the same speed in cast iron. The tendency to heat did not increase with the speed, and no difficulty has occurred in either case. The heat generated by high speed bearings is governed by pressure and velocity taken together. Speed alone does not cause difficulty when the fitting is good.

At present a great deal of the information respecting high speed bearings is empirical and, as before said, promises to remain so. The subject is one that demands treatment far beyond the space at command here.

NOTES, MEMORANDA.

SECTION SECOND.

CHAPTER IV.

THE TRANSMISSION OF POWER.

General Remarks.—The transmission and conveyance of power, with changes of force and motion, is the purpose of the greater part of all machinery in use, and includes all except prime movers and machines of application, such as apply power to work. For the purpose of transmission there are employed:

(1) Mechanical gearing, transmitting power and rotary motion.
(2) Hydraulic apparatus, conveying power alone.
(3) Steam, conveying heat and power.
(4) Air, conveying power alone.
(5) Gas, conveying power, heat and light.
(6) Electricity, conveying power and light.

The expediency of employing one or another of these means depends upon the functions required, first cost, and adaptation to the circumstances of a case. As no two of the methods are the same in nature and effect, it is useless to put them in comparison for comment.

The development of apparatus for power transmission is perhaps the most extensive and important branch of modern engineering. Its economic effect reaches all branches of industry, and the field is so wide that the end cannot be foreseen or predicted.

As before remarked, the various methods of transmission cannot be considered in comparison. There can be no general rule, nor any rule, that does not include the circumstances of a case; hence there are frequent mistakes made in selecting one method when another would be better. This is always an engineering and also an economic problem. Climate, cost of fuel, distance, position, extent, and so on, have to be considered.

The element of distance is dealt with in a table given in the chapter on electrical transmission, which will show how rapidly circumstances change with respect to this element alone. The means for transmitting power have made much less progress than the nature and means of generating it. One is mainly a scientific problem, the other a matter of judgment in each case.

NOTES, MEMORANDA.

Tooth Wheel Gearing.—The elements and proportions for gearing of this kind will be given in the chapter on machine draughting. Tooth wheels are the most common means of changing the velocity and direction of motion and force. When perfectly formed they are nearly devoid of friction, and have the advantage over ropes and belts of transmitting positively,

The following table shows the horse-power that can be transmitted by cast iron wheels of different pitch and at different velocity, for each inch of face, or width:

POWER TRANSMITTED BY GEAR WHEELS PER INCH OF WIDTH.

Pitch in Inches.	Velocity in Feet per Minute.										
	15	30	60	120	240	360	480	600	720	960	1200
¾	.008	.01	.03	.06	.13	.20	.27	.33	.40	.54	.66
1	.015	.03	.06	.12	.24	.36	.48	.06	.72	.96	1.20
1¼	.023	.04	.09	.18	.37	.56	.75	.94	1.10	1.50	1.90
1½	.033	.67	.13	.27	.54	.81	1.10	1.35	1.60	2.10	2.70
1¾	.045	.09	.18	.36	.73	1.10	1.40	1.80	2.10	2.90	3.60
2	.060	.12	.24	.48	.96	1.40	1.90	2.40	2.80	3.80	4.80
2½	.093	.18	.37	.75	1.50	2.20	3.00	3.70	4.50	6.00	7.50
3	.135	.27	.54	1.08	2.10	3.20	4.30	5.40	6.40	8.60	10.80
4	.240	.48	.96	1.90	3.80	2.70	7.60	9.60	11.50	15.00	19.20

Remarks.—The width or face of gear wheels is from two to four times the pitch. In America the average is three times; in England, two and one half times the pitch.

Line Shafting.—This term is applied to continuous shafts for conveying and distributing power in factories, also, within certain limits, for transmitting to distances. Such shafts are in a sense an extension of the prime mover, and commonly so classed in establishments. In their arrangement, one of the first things to be determined is the length of the coupled sections and distance between bearings, because this is often governed by the arrangement of beams and supports, and the diameter may be a resultant of these lengths.

It is generally more convenient to arrange shafting in short sections, with one bearing and one coupling to each piece. This applies to shafts of two inches or more in diameter, and when the strain of bands or other gearing is not more than average. The first or starting section is made longer, so as to receive two bearings, otherwise there is inconvenience in erecting. The following table gives suitable lengths, allowing for a coupling on each end of the first section. Arranged in this manner the distance between the centers of bearings is uniform and the same as the lengths given in the third line.

(continued.)

NOTES, MEMORANDA.

LENGTH OF LINE SHAFTS, SHORT SECTIONS.

Diameter, inches.....	2	2¼	2½	2¾	3	3½	4
First Section, feet.....	10	11¼	12½	13¾	15	17½	20
Other Sections, feet.....	8	9	10	11	12	14	16

This gives a distance of forty-eight diameters between supports, and is an extreme. With couplings for each section, however, the rigidity is increased and the proportions are within good practice. When the sections are longer, and require two bearings on each, the distance between bearings should be less. The following table will answer for lengths and the distance between bearings, the latter being uniform throughout the line:

LENGTH OF LINE SHAFTS, LONG SECTIONS.

Diameter, inches....	1¼	1½	1¾	2	2¼	2½	2¾	3	3½	4
First Section, feet..	9¼	12½	13¾	16	18¼	20½	22¾	23	25½	28
Other Sections, feet.	8	10	12	14	16	18	20	20	22	24
Bet. Bearings, feet..	4	5	6	7	8	9	10	10	11	12

REMARKS.—The diameters given are by quarters and half inches. It is customary to turn shafts one sixteenth to one eighth inch less in diameter because of the iron being rolled to even sizes. It is much better to have the iron prepared to "turning size," and this would soon be done if generally demanded. In some cases the first section or driving one is made of larger diameter and shorter. There is no objection to this, but diminishing lines where the diameter is changed several times is a mistake. One line should have one diameter and one length between bearings, so the shaft or its fittings, including pulleys, are interchangeable throughout an establishment, or to any other use.

It is seldom best to employ line shafts less than two and one half inches in diameter, unless they are to run at a high speed. The increased number of couplings and bearings on small shafts makes their first cost much more in proportion.

Size of Shafts.—Authorities, respecting the size of line shafts, vary greatly. Although the diameter is based upon their torsional strength or stiffness, there has to be a factor of safety to meet accidental strains, such as the winding of belts, sudden resistance by clutch motions, and so on.

The following formulæ give an average for shafts of good iron or soft steel. The constant 60 is varied from 30 to 100. The highest being a maximum for prime movers of iron, and the lowest for line shafts of stiff steel:

$$D = \sqrt[3]{\frac{60\,P}{R}} \qquad R = \frac{60\,P}{D^3} \qquad P = \frac{RD^3}{60}$$

D = diameter. R = revolutions per minute. P = number of H. P. 60 a constant.

Formulæ and tables of the kind are based on average conditions and not to be indiscriminately applied. The distinction between iron and steel shafts is disappearing, as fine steel and good iron are not different as to strength.

CONTINUED.

NOTES, MEMORANDA.

SIZE OF LINE SHAFTS, IRON OR SOFT STEEL.

Diameter of Shafts in Inches.	Number of Revolutions per Minute.													
	25	50	75	100	125	150	175	200	225	250	275	300	325	350
1¼	.06	1.3	2.0	2.6	3.3	4.0	4.3	5.3	6.3	6.6	7.3	8.0	8.6	9.3
1½	1.60	2.8	4.2	5.5	7.0	8.4	9.8	11.0	12.0	14.0	15.0	17.0	18.0	20.0
1¾	2.20	4.3	6.6	8.9	11.0	13.0	15.0	18.0	20.0	22.0	24.0	26.0	28.0	30.0
2	3.30	6.6	10.0	13.0	16.0	20.0	23.0	26.0	30.0	33.0	36.0	40.0	43.0	46.0
2¼	4.60	9.3	14.0	18.0	23.0	28.0	32.0	37.0	42.0	46.0	51.0	56.0	60.0	65.0
2½	6.50	13.0	19.0	26.0	32.0	38.0	45.0	51.0	57.0	65.0	72.0	80.0	85.0	91.0
2¾	8.60	17.0	26.0	34.0	43.0	51.0	60.0	70.0	77.0	86.0	95.0	103.0	112.0	120.0
3	11.00	22.0	33.0	45.0	56.9	67.0	75.0	90.0	100.0	112.0	123.0	135.0	146.0	157.0
3½	17.00	35.0	53.0	71.0	90.0	107.0	124.0	142.0	160.0	178.0	196.0	214.0	232.0	249.0
4	26.00	53.0	80.0	106.0	133.0	160.0	186.0	213.0	240.0	266.0	293.0	303.0	346.0	373.0

Remarks.—The body of the table shows horse-power, based on the third formula. It is arranged with diameter and speed in the margin for more convenient reference. The horse-power assumed is in excess of what is usually allowed for iron shafts, and may be reduced from twenty-five to fifty per cent. in cases where heavy strain is to be encountered.

Speed of Line Shafts.— For high-speed machines, such as those for wood working, line shafts should run as fast as circumstances will permit, to avoid the expense of large driving pulleys on line shafts. For metal-working machinery and many other kinds, first movers are arranged for slow speed, and line shafts require to run slow in order to increase belt surface on driving pulleys. First movers on machines usually have barely enough power to drive, and generally without any reference to line shafts, or main driving pulleys. This is unfortunate and unnecessary, because in the case of metal-working machines and other classes, first movers could have the same velocity, and the difference in power be varied by the width of belts.

The following table gives suitable speed for two cases:

SPEED OF LINE SHAFTS.

Diameter of Shaft in Inches..	1½	1¾	2	2¼	2½	2¾	3	3½	4
Number of Revolutions per Minute, Wood-working Machinery.....	300	275	250	225	200	180	170	160	150
Number of Revolutions per Minute, Metal-working Machinery.....	150	140	130	120	110	100	95	90	85

Remarks.—The mean velocity of the bearing surfaces is 240 feet per minute in the first line, and 130 feet per minute in the second line.

NOTES, MEMORANDA.

WEIGHT OF IRON SHAFTS

IN LBS. PER FOOT OF LENGTH.

Diameter of Shafts.	1½	1¾	2	2¼	2½	2¾	3	3¼	3½	4	4½	5	5½	6
Finished Sizes	5.41	7.46	9.83	12.53	15.55	18.91	22.59	26.60	30.94	40.59	53.01	65.45	79.19	94.25
Rough Sizes .	5.89	8.02	10.47	13.25	16.36	19.80	23.56	27.65	32.07	41.89	56.00	68.76	82.83	98.22

The finished weights given are for diameters one sixteenth inch less than the rough diameters.

Shafts for Long Distances.— There has been in practice neglect of adapting line shafts for driving at long distances. Torsional elasticity is the only limit, when bearings, couplings, and lubricating apparatus are of the best. If shafts are straight, stiff, well turned and well mounted, the loss from friction in bearings and in the air will not exceed two per cent. for each 100 feet of length. They possess the advantage of positive transmission, and permit power to be taken off at any point. For long shafts, conveying power between two points, the following speed is recommended:

Diameter of Shafts.....	1½	1¾	2	2¼	2½	2¾	3	3½	4
Revolutions per minute.....	300	280	260	240	220	200	180	160	140

SHAFT COUPLINGS.

Interchangeable Couplings.— One of the greatest improvements during recent years, in line shaft fittings, has been interchangeable couplings. These were first introduced by Messrs. William Sellers & Co., of Philadelphia, but it was a long time before their objects and functions were understood. Even now, it is not generally known that it is the couplings mainly that make the difference between a special line shaft with each piece fitted to a particular piece, and a standard line of shafting, any piece of which can go anywhere in the line. With couplings of this kind additions and changes are readily made, and if a coupling should in any way fail, a new one can at once be put on, without delay.

Interchangeable couplings have been produced in a variety of ingenious forms, mostly to secure compression by means of wedges or conical sleeves. It is now conceded, however, that no form answers so well as a split clamp with the strain of the bolts acting directly to produce compression, and the flexure of the shells maintaining a concentric fit.

The range of diametrical adjustment possible with a cylindrical cone is theoretically nothing at all, and in practice much the same, so that the gain over solid fitting is only in the convenience of putting on and removing couplings. This advantage is in a measure lost when the main shells are made solid, and the couplings removable only by taking down a shaft.

NOTES, MEMORANDA.

It will not be necessary to describe the various forms of compression couplings in use. A long experience with every known modification has led to a belief that no other method is so good or so cheap as the plain clamp.

Clamp Couplings.—The principle of clamp couplings is shown in Figure 37, which illustrates the method of connecting broken marine shafts. Supposing the points at *a*, *a*, *a*, to represent three fulcra, the clamp being bored a little larger than the shaft, then compression will fall on nine points in the circumference of the shaft, or what is more likely, be uniform over the whole surface and act like a band shrunk on.

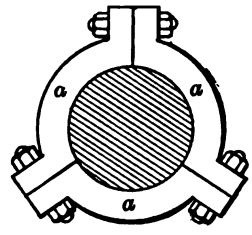

FIG. 37.
MARINE CLAMP.

Figure 38 shows a clamp coupling of the same class, arranged for connecting line shafts from one and one half inches to two and one half inches diameter.

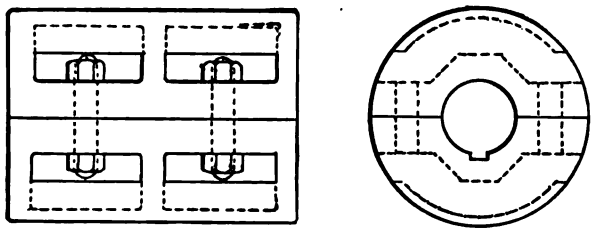

FIG. 38. CLAMP COUPLINGS, 1½ in. to 2½ in.

These couplings are quite different from those made with a solid or a flanged shell. They are an application of the box principle, previously explained in connection with machine framing. The metal is disposed in two annular shells connected by flanges or diaphragms. This increases the diameter so as to attain the required transverse strength without waste of metal. It also shields the clamping bolts and permits the couplings to be used as pulleys for belts, if required. The cost of making couplings of this kind is much less than for those with conical bushes, and not more than one half as much as for flange couplings. The only operation requiring accuracy is boring. The holes for bolts are drilled through a template, as shown in Figure A; the template being turned over for the different halves, or else made true enough to match in all positions.

A feature of some importance with these couplings is that they can be put on or removed without disturbing shafts. Dimensions are given in the next table.

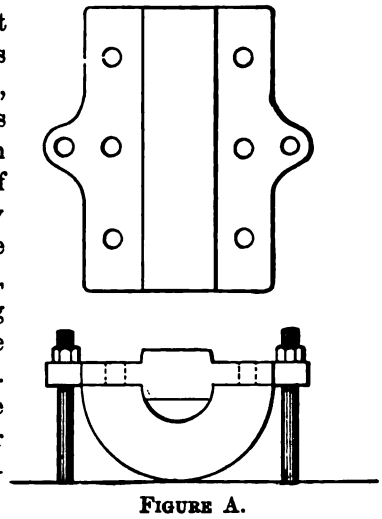

FIGURE A.

NOTES, MEMORANDA.

Figure 39 shows couplings of the same kind for shafts from two and one half inches diameter to four inches diameter, which can be removed or put on without taking down or moving shafts.

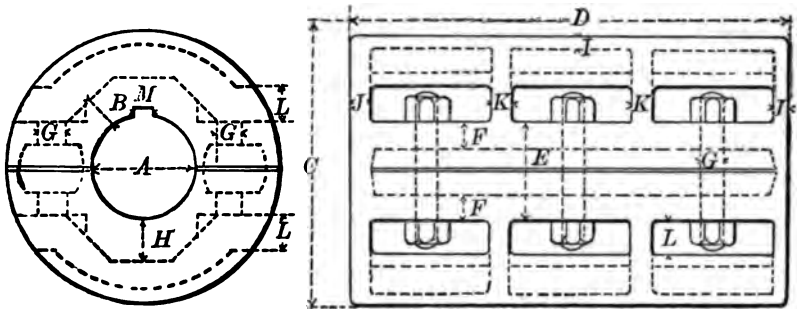

FIG. 39. CLAMP COUPLINGS, 2½ in. to 4 in.

DIMENSIONS IN INCHES.

A	B	C	D	E	F	G	H	I	J	K	L	M	No. of Bolts.
1½	½	4½	5⅛	1½	½	½	⅝	¼	⅜	⅜	⅝	⅜	4
1¾	9/16	5½	7¼	1¾	⅝	⅝	¾	5/16	7/16	⅜	¾	⅜	4
2	⅝	6	8	2	⅝	⅝	¾	5/16	½	½	¾	7/16	4
2¼	11/16	6¼	8	2¼	⅝	⅝	⅞	5/16	½	½	¾	7/16	4
2½	¾	6½	10⅞	2½	¾	⅝	1	⅜	½	7/16	¾	½	6
2¾	13/16	7½	12⅝	2¾	¾	¾	1	⅜	9/16	½	⅞	½	6
3	⅞	7½	12¾	2¾	⅞	¾	1⅛	⅜	⅝	½	⅞	⅝	6
3½	1	8¾	14½	3	⅞	⅞	1¼	⅜	11/16	9/16	1	¾	6
4	1⅛	10	16¼	3¼	⅞	1	1¼	7/16	¾	⅝	1 3/16	¾	6

REMARKS.—These dimensions are from experiments in actual practice. The ends and exterior are finished and polished. The bolts require to be of exact length, one set of nuts loose, the others to fit. In boring, a piece of tin or paper is placed in the joint. The keys should be square, planed on the sides only. The proportions are for strong American iron and for average strains. None of these couplings have failed in use. They are made in America and in Europe, and cost less than other compression couplings. The outer shell is sometimes put on independently; this adds no strength, is a waste of iron, and expensive.

Flange Couplings.—These are employed in cases where shafts have to be temporarily disconnected, for heavy shafts, and where the proportions required exceed the dimension of standard interchangeable couplings. Figure 40 shows section and end view of one arranged according to good practice.

(CONTINUED.)

NOTES, MEMORANDA.

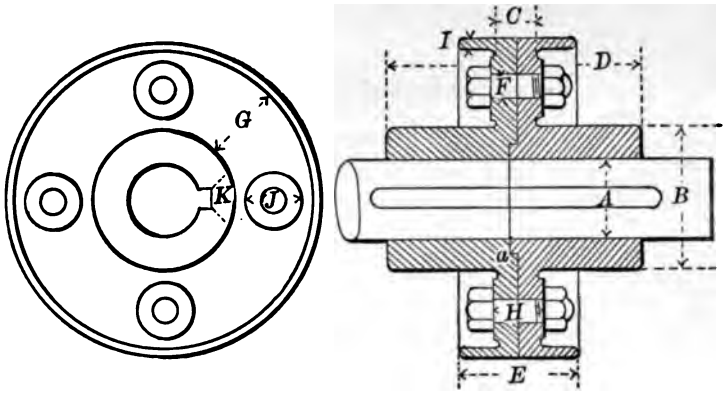

FIG. 40. FLANGE COUPLING.

DIMENSIONS IN INCHES.

A	B	C	D	E	F	G	H	I	J	K
1½	3½	1	6	2½	½	2	1⅜	¼	1¼	⅜
1¾	3¾	1⅛	6½	3	⅝	2¼	1½	5/16	1½	⅜
2	4¼	1¼	7	3¼	⅝	2¼	1⅝	5/16	1½	½
2¼	4¾	1⅜	7½	3½	¾	2½	1¾	5/16	1¾	½
2½	5¼	1½	8	3¾	¾	2½	1⅞	⅜	1¾	⅝
2¾	5¾	1⅝	9	4	⅞	2¾	2	⅜	2	⅝
3	6¼	1¾	10	4¼	⅞	2¾	2⅛	⅜	2	¾
3½	7½	1⅞	11	4½	1	3	2¼	7/16	2¼	¾
4	8½	2	12	5	1¼	3¼	2½	½	2¾	⅞

REMARKS.—The couplings should be turned all over, except the web plates, and finished on the circumference. The interlock at *a* should be from three sixteenths inch to three eighths inch deep. The fits should be draw-filed and driven. The keys should be tapered and fitted by trial. Couplings of this kind should be faced true on the shafts. They are not interchangeable.

Muff Couplings.—These are employed in cotton mills in England, and to some extent for other purposes. Couplings made in this way require the best fitting, and are more expensive than either of the forms before described. They are in some cases made of wrought iron, but generally of cast iron. Their advantages are: a smooth exterior, great strength, and absolute certainty of holding when well fitted. When there are thousands of feet of shafting in a mill, the whole depending on each coupling, and a "stop" costing hundreds of dollars, the extra expense of couplings becomes a small matter.

The enlarged ends cause no difficulty, because pulleys are fastened with conical shells of cast iron split into four or more parts.

(CONTINUED.)

NOTES, MEMORANDA.

Figure 41 is a section showing the common construction of muff couplings.

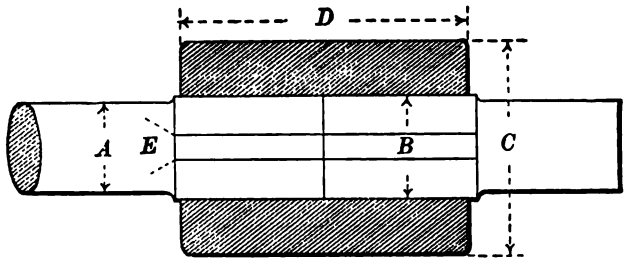

FIG. 41. MUFF COUPLINGS FOR SHAFTS.

DIMENSIONS IN INCHES.

A	2	2¼	2½	2¾	3	3½	4	4½	5
B	2⅜	2⅝	3	3¼	3½	4	4½	5⅛	5¾
C	5	5½	6½	6¾	7½	8¼	9	9½	10½
D	6¾	7½	8½	9½	10	11	12	13½	15
E	½	½	⅝	⅝	¾	¾	⅞	1	1⅛

REMARKS.—These proportions call for strong cast iron shells. The ends and circumference are polished. Keys of iron; taper, three sixteenths inch in twelve inches. Depth of keys, one half their width.

Counter-Shafts.—The author twenty years ago arranged a table of dimensions for counter-shafts that has remained in use ever since. The base for dimensions was the driving belts and the proportions for high speed, but the table proved of great value in general practice. Nothing is made with more irregularity than counter-shafts. There seems to be no system whatever. The loose pulleys are generally a source of annoyance, arranged without proper means of lubrication, and noisy. In England it is common to place them inside the fast pulleys, on parallel shafts, so that repairing is impossible.

A good deal of effort has been expended in contriving clutch motions for counter-shafts, especially those for engine lathes, and with poor success. There is no kind of friction clutch so good or so simple as a shifting belt, where the contact surfaces are leather and smooth iron, and where the area in contact changes with pressure. The purpose of clutches with metallic contact, by means of wedges, cones, and so on, is to secure quicker action. The same thing can be attained in a sufficient degree by increasing the speed of driving belts, and making them narrower. Modern planing and shaping machine gearing is an example. The reverse movement is attained as suddenly as the nature of the machinery permits.

(CONTINUED.)

NOTES, MEMORANDA.

The drawing of a plain counter-shaft, Figure 42, corresponds in many respects to the practice recommended by Messrs. William Sellers & Co., of Philadelphia.

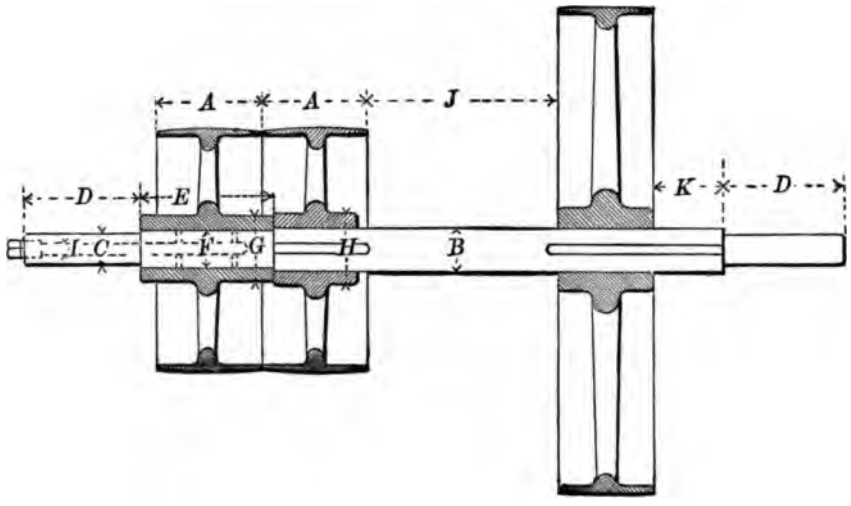

FIG. 42. COUNTER-SHAFT FOR BELTS.

DIMENSIONS IN INCHES.

A	B	C	D	E	F	G	H	I	J	K
3⅛	1¼	1	4⅛	3½	1⅛	2	2½	½	7	2½
3⅝	1⅜	1⅛	4⅝	4	1¼	2¼	3	½	8	3
4⅛	1½	1¼	5⅛	5	1⅜	2½	3¼	⅝	9	3½
5¼	1¾	1⅜	5⅝	6	1½	2¾	3½	⅝	11	4
6¼	2	1⅝	6⅛	7½	1¾	3	4	¾	13	5
7¼	2¼	1⅞	7¼	8½	2	3¼	4½	¾	15	6
8¼	2½	2	8¼	10	2¼	3½	5	¾	18	7

REMARKS.—The dimension *J* is minimum, and only enough to make room for two belts when thrown off. The dimension *K* is provided in case the belt is thrown off on that side. The pulley bosses may be the same on the fast and loose pulley, for cheap work, or when the speed and strain are not much. The dimension *E* should always be equal on each side from the center of the loose pulley. The hole at *I* is to grease the loose pulley; if filled with soft grease no oiling is required. The fast and loose pulleys require convex faces. An average length for counter-shafts is thirty diameters.

Fixed Studs.—These are commonly made without provision for oiling except holes drilled in the bosses of wheels or pulleys so mounted. In this way no oil can be applied without stopping, and it is thrown out as soon as the wheel or pulley is started. There is scarcely ever a case where the oil cannot be applied through the stud, as shown in the drawing, Figure 43.

NOTES, MEMORANDA

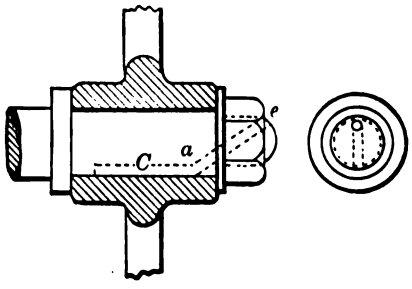

FIG. 43. FIXED STUDS.

The oil ways should be drilled from *e* to *a*, diagonally, and a groove formed along the bottom at *C*. This groove, if made square, can be filled with a ribbon of felt, and the lubrication so assured that a bearing of the kind is quite as durable as with a running spindle.

Another way of arranging such studs is to bore a hole in the center, to be filled with grease, as for the loose pulley in Figure 42.

The author has in his practice mounted the top wheels of hundreds of band sawing machines in this manner, none of which ever gave the least trouble, although strain often exceeded one hundred pounds on each square inch of bearing surface.

COLLARS FOR SHAFTS.

Loose Collars.—Collars are usually made of forged or cast iron, with a tendency to thin sections in the diameter, and are commonly fastened by means of set-screws. Cast iron is not a suitable material for solid collars in any case, and forged ones are expensive. Those shown in Figure 44 are

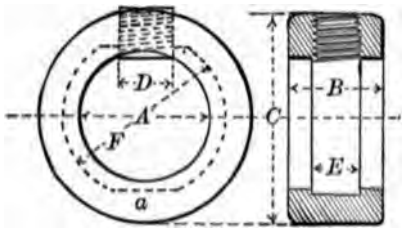

FIG. 44. MALLEABLE IRON COLLARS.

suitable for nearly all cases, are strong enough and much cheaper than forged collars. They can be made of malleable cast iron or steel, with a reinforced section where the screw is tapped in. A set of neat metal patterns for such collars sent to a steel foundry is a profitable investment for any machine works. The following table gives average proportions.

(CONTINUED.)

NOTES, MEMORANDA.

DIMENSIONS IN INCHES.

A	1	1¼	1½	1¾	2	2¼	2½	2¾	3	3½	4	4½
B	¾	1	1⅛	1¼	1⅜	1⅜	1½	1⅝	1¾	1⅞	2	2½
C	1⅞	2⅛	2⅝	3	3⅜	3⅝	3⅞	4⅛	4½	5¼	6	6½
D	⅜	½	½	⅝	⅝	⅝	¾	¾	¾	⅞	⅞	⅞
E	⅜	⅝	⅝	¾	¾	⅞	⅞	⅞	⅞	1	1	1¼
F	1¼	1½	1⅞	2⅛	2⅜	2⅝	3	3¼	3½	4	4½	5

REMARKS.—These collars are not intended to resist heavy thrust, but to prevent end motion where ther is light strain, and to keep on loose wheels or pulleys. The filled in part, *a*, is to balance for high speeds. The screws can be slotted as shown, or have a square or hexagonal hole in the center for a key. The screw threads are preferably of a finer pitch than the common standard.

Split Collars.—These collars are very convenient, and wherever they can be employed are preferable to solid ones. The cost of making them is but little more, and there is the advantage of slightly reducing shafts where the collars fit on, and thus secure against their moving under heavy strain. The screws can be housed as shown in Figure 46, but even as in Figure 45 are less objectionable than projecting set-screws. These collars can be made of cast or malleable iron, or of brass; the latter material, when hard, is very suitable for small sizes.

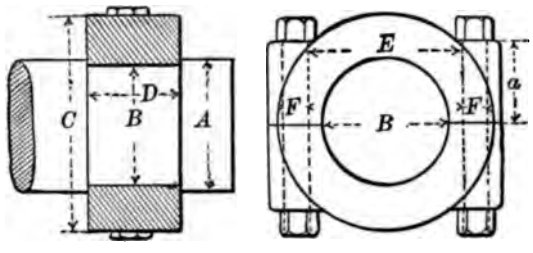

FIG. 45. SPLIT COLLARS.

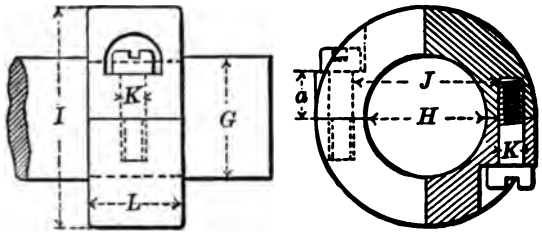

FIG. 46. SPLIT COLLARS.

(CONTINUED.)

NOTES, MEMORANDA

DIMENSIONS IN INCHES.

FIGURE 45.						FIGURE 46.					
A	B	C	D	E	F	G	H	I	J	K	L
1½	1 7/16	2⅜	1	1¾	⅜	1½	1 7/16	2⅜	1¾	⅜	⅞
1¾	1 11/16	2¾	1⅛	2	⅜	1¾	1 11/16	2¾	2	⅜	1
2	1 15/16	3	1¼	2¼	⅜	2	1 15/16	3	2¼	⅜	1⅛
2¼	2 3/16	3⅜	1⅜	2½	½	2¼	2 3/16	3⅜	2½	½	1¼
2½	2 7/16	3¾	1½	2⅞	½	2½	2 7/16	3¾	2⅞	½	1½
2¾	2 11/16	4⅛	1¾	3⅛	½	2¾	2 11/16	4⅛	3⅛	½	1¾
3	2 15/16	4½	2	3⅜	⅝	3	2 15/16	4½	3⅜	⅝	2
3½	3⅜	5⅛	2¼	3⅞	⅝	3½	3⅜	5⅛	3⅞	⅝	2¼
4	3⅞	5¾	2½	4⅜	⅝	4	3⅞	5¾	4⅜	⅝	2½
4½	4⅜	6½	2¾	5	¾	4½	4⅜	6½	5	¾	2¾
5	4⅞	7¼	3	5½	¾	5	4⅞	7¼	5½	¾	3
6	5⅞	8¾	3¼	6½	1	6	5⅞	8¾	6½	⅞	3¼

REMARKS.—The thickness at *a* is a resultant of other dimensions, and should be reduced as much as possible. The dimensions *B* and *H* depend on whether the collars are recessed into shafts; if not, bore to dimensions *A* and *G*. The dimensions *C* and *I* can be increased when more bearing surface is required.

FASTENING KEYS.

Keys for Shafts.—Keys for fastening work on shafts are of two kinds, altogether different in proportions and manner of holding. One class includes flat keys, acting as diagonal struts employed for permanently fastening heavy work. The other class includes deep or square keys, holding by shearing strain, and suitable for work that has to run very true, or be frequently removed.

Flat keys are employed for mill gearing, engine cranks, large gear wheels and so on; square keys for machine-tools and other work where accurate fitting is required.

The difference between strut keys and feather keys is not commonly known, and the use of the two methods is a matter of accident rather than rule. It is easy, however, to determine in any case which is most suitable. Sliding or movable keys should always be of the deep or feather kind, indeed, must be to avoid cramping. For hand-wheels and hand-cranks, a taper fit held by a nut on the end is preferable to keys of any kind. Round pins, smooth or threaded, instead of keys, are suitable when the material permits true holes to be drilled in the joint.

NOTES, MEMORANDA.

Flat Keys—such as are shown in Figure 47, are commonly made with width equal to one fourth the diameter of shafts, and their depth determined by a parallelogram, the diagonal of which is 30°, as shown at *a*.

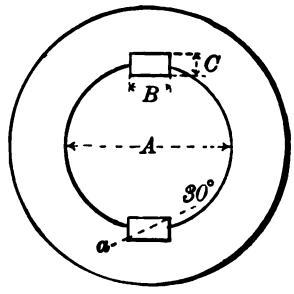

FIGURE 47.

These keys, as before explained, drive as struts from their diagonal corners, and require to be well fitted on all sides. They are also depended upon to hold in place wheels, pulleys, or other work, consequently must be tapered and fit on the top and bottom. They are apt to spring work and throw it out of true, unless very carefully fitted so as to bear whole length. When employed as wedges to fasten work, they often conceal bad fitting. The following table gives proportions for flat keys:

DIMENSIONS IN INCHES.

A	1	1¼	1½	1¾	2	2½	3	3½	4	5	6	7	8
B	¼	5/16	⅜	7/16	½	⅝	¾	⅞	1	1⅛	1⅜	1½	1¾
C	5/32	3/16	¼	9/32	5/16	⅜	7/16	½	⅝	11/16	13/16	⅞	1

REMARKS.—For shafts larger than those named in the table, there should be two or more keys, the width of which can be one sixth of the shaft's diameter, and the depth by the rule above. Soft cast steel is preferable for small flat keys, so the points can be tempered to prevent upsetting when they are driven out.

Feather Keys.—These are shown in Figure 48. Their section is usually square, or, as the sides alone require planing, it is common to have their width less than the depth. The grooves in shafts should be nine sixteenths of the key's depth. The dimensions are arranged to suit the commercial sizes of steel or iron bars.

DIMENSIONS IN INCHES.

A	1	1¼	1½	1¾	2	2½	3	3½	4
B	5/32	7/32	9/32	11/32	13/32	15/32	17/32	9/16	11/16
C	3/16	¼	5/16	⅜	7/16	½	9/16	⅝	¾

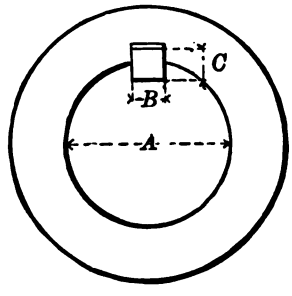

FIGURE 48.

REMARKS.—Keys of this kind should not bear on the top and bottom. When work is keyed on the end of a shaft, a nut is required; when fastened in this manner, driving fits, or at least good fits, are indispensable, and any imperfect fitting is at once detected. Machine tool makers, as well as makers of fine machinery of all kinds, employ keys of this kind. In some cases, when work is inspected, a thin strip of metal is passed over the keys to be sure there is no bearing at the back.

NOTES, MEMORANDA.

Sliding Feathers.—This term is applied to keys for sliding bearings, such as the spindles of drilling and boring machines, and other cases where either the shafts or the bosses move. These feathers being loose in one or the other of the seats, drive the same as feather keys, and are commonly made with the same proportions. This is, however, not good practice, because surfaces with movement require more area than fixed ones, and it is necessary to have surface enough to avoid abrasion. This can in most cases be secured by length as well as breadth, but is rarely enough, or even half enough, in common practice. Bearing surface can also be attained by increasing the number of feathers. Figure 49 shows a proper arrangement of two kinds of feathers for sliding bearings.

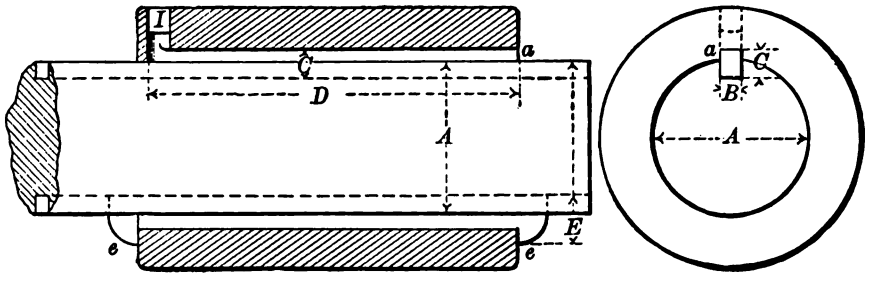

FIG. 49. SLIDING FEATHERS.

DIMENSIONS IN INCHES.

A	1¼	1½	1¾	2	2¼	2½	3	3½	4	4½
B	¼	¼	5/16	5/16	⅜	⅜	½	9/16	9/16	⅝
C	⅜	⅜	7/16	7/16	½	½	⅝	¾	¾	⅞
D	3	3½	4	5	6	7	9	11	13	15
E	½	9/16	⅝	⅝	11/16	¾	⅞	1	1⅛	1¼

REMARKS.—When the boss abuts against collars or bearings, the covered feathers shown at *a* should be used, but if the range is clear, hook heads, as shown at *e*, can be employed. The dimension *D* is not always attainable; the lengths given are maximum, and may be reduced. In cases where there is much strain there should be two feathers instead of one; in extreme cases, three. Two are better than one in all cases, because balancing the strain. The key-way in the shaft should be a little deeper than the one in the shell.

Conical Bushes.—It is common in England to fasten pulleys in cotton mills with conical bushes, or wedges they may be called, because the shells are split into a number of parts that act like wedges or taper keys. The plan is a very good one, is not expensive and does not injure a shaft. There are also other devices for fastening work, but of exceptional use.

NOTES, MEMORANDA.

Draw Keys.—There is no detail in machine construction more varied than common keys. The form of the head, when made with a hook for drawing, shows at a glance the amount of skill employed in designing, and if ill proportioned it mars all that is near it.

The diagram, Figure 50, will furnish some of the principal proportions. The taper on the top depends on length and various other conditions. It may vary from one eighth to one half inch per foot.

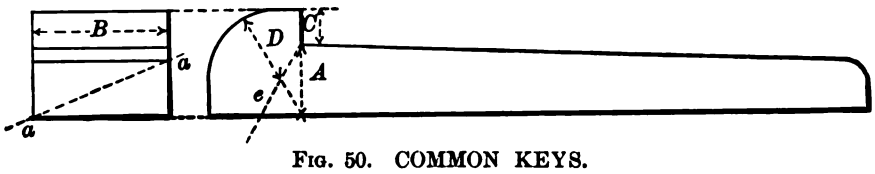

FIG. 50. COMMON KEYS.

$$A = \frac{5B}{8} \qquad B = \frac{8A}{5} \qquad C = \frac{A}{2} \qquad D = \frac{5B}{8}$$

Angles a, a, = 30 degrees. Taper, $\frac{1}{8}$ in. to $\frac{1}{2}$ in. per foot.

Set-Screws.—There are very few places where set-screws are suitable for fastening work on shafts; only in the case of light strain, and when the screw heads are shielded. The convenience and cheapness of the method have carried it far beyond its proper place, especially in wood-working machinery. The chief advantage of set-screws is that pulleys or wheels can be fastened at any point on a shaft without cutting key-ways.

A tolerably strong fastening by set-screws can be made in the manner shown in Figure 51, by means of thin flat keys or bearing pieces beneath the screws, resting on a "flat" made on a shaft. This holds against average strain, is not expensive, and the seat can be made after a shaft is in place, and the position of the key determined by experiment.

DIMENSIONS IN INCHES.

A	1¼	1½	1¾	2	2¼	2½	2¾	3
B	⅜	½	½	⅝	⅝	¾	¾	¾
C	⅛	⅛	⅛	$\frac{3}{16}$	$\frac{3}{16}$	$\frac{3}{16}$	¼	¼
D	⅜	½	½	½	⅝	⅝	¾	¾

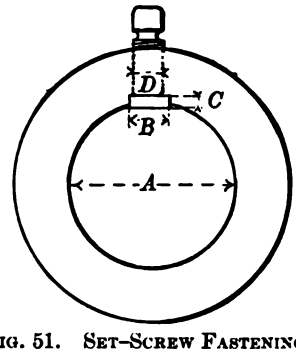

FIG. 51. SET-SCREW FASTENING.

REMARKS.—The keys should be steel, fitted on the edges only, with some space on top, so as to come out easily. This method of fastening causes heavy radial strain on the bosses of wheels; these should be twice the diameter of the shaft.

NOTES, MEMORANDA.

CHAPTER V.

DRIVING BELTS.

General Remarks.—There are a great number of formulæ and rules relating to belts, for determining their size and the power they will transmit, but such rules have little practical value and are seldom applied, because of the varied conditions under which belts operate.

The material, both of belts and of the pulleys on which they run, their weight, condition and tension, are all important factors that cannot be included in any general rule. Tension or strain is a governing factor in all formulæ relating to belts, but it is neither ascertainable nor controllable in practice. In different rules examined, the assumed transmitting power of belts varies more than two to one. The limit of width is in a sense a commercial one; belts are often too small, but never too large.

Many ways have been invented to increase their adhesion. A late one, proposed in England, is to perforate the rims of pulleys to attain adhesion. The fact is, however, no such thing is required. The escape of air beneath the band is also claimed as an advantage of these perforations. At high speed some such effect may follow, but at best it can only lengthen the arc of contact a trifle. There is generally adhesion enough; what is wanted is width, not adhesive devices or compounds.

In practice there are only two kinds of belts that need be considered: leather and cotton. The latter to include those with India rubber coating, commonly called gum belts.

Leather is more endurable where there is rubbing action, resists animal oils, and is preferable in all cases for shifting belts, but is not so suitable for main driving as gum bands of good quality. The driving capacity of gum belts is at least a third more than leather of equal width and weight, when the surfaces of each are dry. As before remarked, width is a commercial consideration of first cost. More power means more strain, and more strain means more wear. The fact is, gum bands have adhesion beyond their endurance, and should be as large as leather ones for the same duty.

In view of the facts given, and many more that might be added, it is thought best to give here a simple rule for the power of belts, based on surface with an arc of contact not less than four times the width of the belt. Computing area or surface is the same thing as width and velocity combined; in other words, is the amount of belt surface passing a fixed point in a given time. It is common to estimate seventy-five square feet of belt equal to one horse-power. The rule is simple and its average is near enough for all cases that arise in ordinary practice.

NOTES, MEMORANDA.

Size of Driving Belts.—The following table will apply for leather and gum, but the previous remarks respecting adhesion should be kept in mind:

Leather Belts, Single Thickness.		Gum Belts, Average Thickness.	
	1 H. P.		1 H. P.
On Smooth Iron Pulleys.....	80 ft.	On Smooth Iron Pulleys.....	60 ft.
On Wooden Pulleys.....	65 ft.	On Wooden Pulleys.....	50 ft.
On Covered Pulleys.....	50 ft.	On Covered Pulleys.....	35 ft.

Remarks.—To apply the above, multiply the velocity of the belt in feet per minute by its width in feet, and divide by the area given in the table; or multiply the velocity in feet per minute by the width in inches, and divide by twelve and by the numbers above. This gives the horse-power. It is common to ascribe double duty to double leather belts. this is wrong, especially for high speed, where a double belt may do no more than a single one; also from the fact that leather belts are seldom made of a single thickness when their width exceeds eight inches. For belts less than eight inches wide, and velocity less than two thousand feet per minute, sixty per cent. may be added for double thickness of leather. The normal velocity is from 1,000 to 2,000 feet per minute, but belts often have to run on small pulleys at 4,000 feet or more. In such cases flexure offers much resistance, and the arc of contact is shortened by weight, so thin belts will often perform more than thick ones. The author, in his practice, has found that in the case of excessive speed, belts made of cotton webbing, coated with beeswax, would perform more than leather. The velocity in one case was 5,000 feet per minute.

Convexity of Pulley Faces.—The convexity of pulley faces, like all else pertaining to belt gearing, is extremely variable in practice, and for no good reason. The error is generally in too much convexity and in not making both pulleys alike. The following rule is applicable in nearly all cases:

Rule.—For pulleys exceeding 4 in. face, the taper each way from the center, $\frac{1}{4}$ in. per foot. This gives a convexity of $\frac{1}{8}$ in. for 12 in. face, and $\frac{1}{4}$ in. for 24 in. face. If curved, the chord of the arc will be the same. For smaller pulleys, $\frac{3}{8}$ in. to $\frac{1}{2}$ in. per foot is not too much. $\frac{3}{8}$ in. per foot gives $\frac{1}{8}$ in. convexity for an 8 in. face, and $\frac{1}{16}$ in. for a 4 in. face. In the case of small pulleys and very high speed, this can be increased.

Belt Flanges.—The inefficiency and destructive effect of common radial flanges to keep belts on pulleys has become so obvious that many makers will not permit their use under any circumstances. Such flanges are based upon the supposition that a belt can be moved or guided after it has its bearing on a pulley, and the result is destruction of the edges of the belts. Belts are guided by being deflected sidewise so they will pass on the pulleys spirally, and this is easily done if pressure is applied at some distance from point of contact, as in the case of common belt-shifting apparatus, and as shown in the side view, *c* being the belt, and the distance *a*, *e*, the range for deflection.

The diagram, Figure 52, shows how flanges may be made to guide belts without injury to their edges. This method is very simple, and its efficiency proved by extensive practice. The diagram is exaggerated in the dimension *B*.

(CONTINUED.)

NOTES, MEMORANDA.

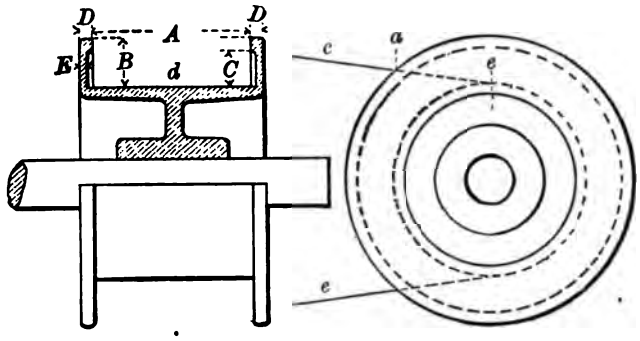

FIG. 52. BELT FLANGES.

DIMENSIONS IN INCHES.

A	2¼	2¾	3¼	4¼	5¼	6½	8½	10½	13	17	19
B	⅝	⅝	¾	⅞	1	1¼	1½	1¾	2	2⅛	2¼
C	7/16	7/16	9/16	⅝	¾	11/16	1¼	1½	1⅝	1¾	1¾
D	¼	¼	5/16	5/16	⅜	⅜	⅜	7/16	7/16	½	½
E	7/32	7/32	¼	¼	5/16	5/16	5/16	⅜	⅜	⅜	⅜

REMARKS.—The dimensions given are for small pulleys when the diameter does not exceed twice *A*. For large pulleys and in important places, the various dimensions may be increased to guard against breakage. In places where there is unavoidable side strain on a belt, the dimension *B* may be increased to give more rubbing surface between *B* and *C*. The face at *d* can be flat for small pulleys, but should be convex when *A* exceeds four inches.

Guidance of Belts.—It is a common saying that "a belt will run to the high side of a pulley." This is right if the high side of a pulley is due to its *shape*, but is wrong when the high side is produced by the *position* of a pulley. The two things are directly opposite in their effect. Referring to the diagram, Figure 53, this will be understood.

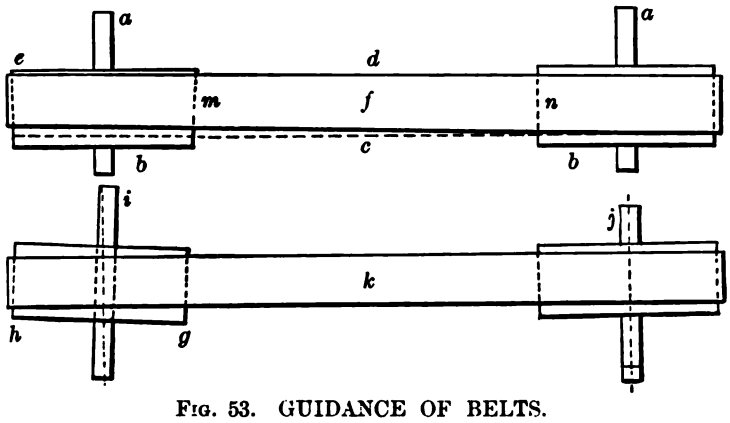

FIG. 53. GUIDANCE OF BELTS.

(CONTINUED.)

NOTES, MEMORANDA.

Supposing the shafts, *a*, *a*, to be parallel, and one of the pulleys, *b*, to have a high side at *e*. Then the belt *f* being stretched on the edge at *d*, and curved edgewise, will leave its normal line *c* and move toward the side of the pulley at *e*. Suppose, on the other hand, the pulley *g*, in the lower diagram, to have a high side at *h*, by reason of the shaft *i*, standing diagonal to the one *j*, then the belt *k*, will pass spirally on the pulley *g*, and approach the edge *h*, running to the low side of the pulley; the opposite of the previous case.

This is a very important matter to understand in erecting belt gearing, and can always be determined by the proposition before given, namely: a belt runs to the high side when the high side comes from "shape," and to the low side when it is the result of "position," or the shafts being out of line. There is, perhaps, no other simple fact of equal importance in millwright work, so little understood as this one. When once comprehended it is never forgotten.

Belts should always run fairly on the center of pulleys, and their failure to do so shows slovenly work. A belt may be kept in line by an idle or tension pulley when shafts are considerably out of line, but it is always best to have it run well before a tension pulley is applied.

Right-Angle Driving.—When shafts are at a right angle to each other, especially when they are in the same story or near together, the arrangement shown in Figure 54 is preferable to a half-crossed belt. It is seldom met with, and is presumably not known in a general way. The driving pulleys *a* are the same as the two below and may run in either direction. *b* is the shaft to be driven, *d* is the driving pulley on the lower shaft, and *c* a loose pulley on the same. The pulley *c* runs in an opposite direction from the shaft *b*, and requires a long bearing, because the surfaces move doubly as fast as the shaft *b*. In this arrangement it may be seen that either shaft may be the driving one and may run in either direction, also that the belt is not deflected or strained, and is twice the length it would be for direct driving.

This method of driving has much to recommend it where pulleys of uniform diameter can be employed, and, as before remarked, is in every way preferable to the half-cross method.

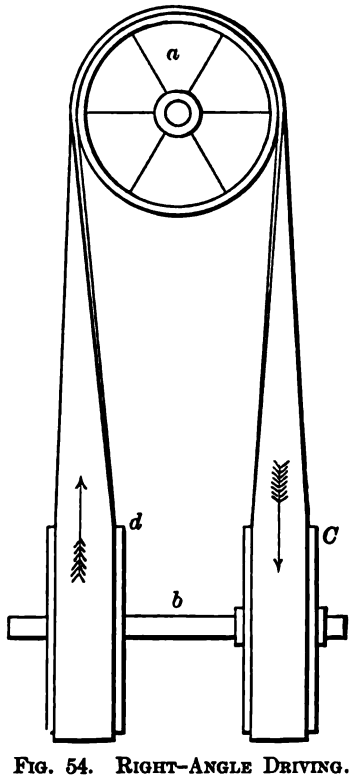

FIG. 54. RIGHT-ANGLE DRIVING.

NOTES MINOSAN

Half-Crossed Belts.—When shafts stand at a right angle with each other they can be driven by what are called half-crossed belts. This method answers very well with certain proportions between the belts, diameter of pulleys and distance between them, but is very objectionable if these proportions are such as to overstrain one edge of the belt. For main belts the diameter of pulleys should not be more than four times the width of the belt, and the distance between centers should not exceed eight times the pulleys' diameter. For example: a belt six inches wide, pulleys twenty-four inches diameter, and distance between, sixteen feet.

Heavy belts of narrow width are best in such cases, because more easily deflected sidewise. The driving strain falls on the crooked side, as it is called, and the edges are liable to be torn if the above-named proportions are not observed.

The diagram, Figure 55, shows the method of arranging pulleys for half-crossed belts.

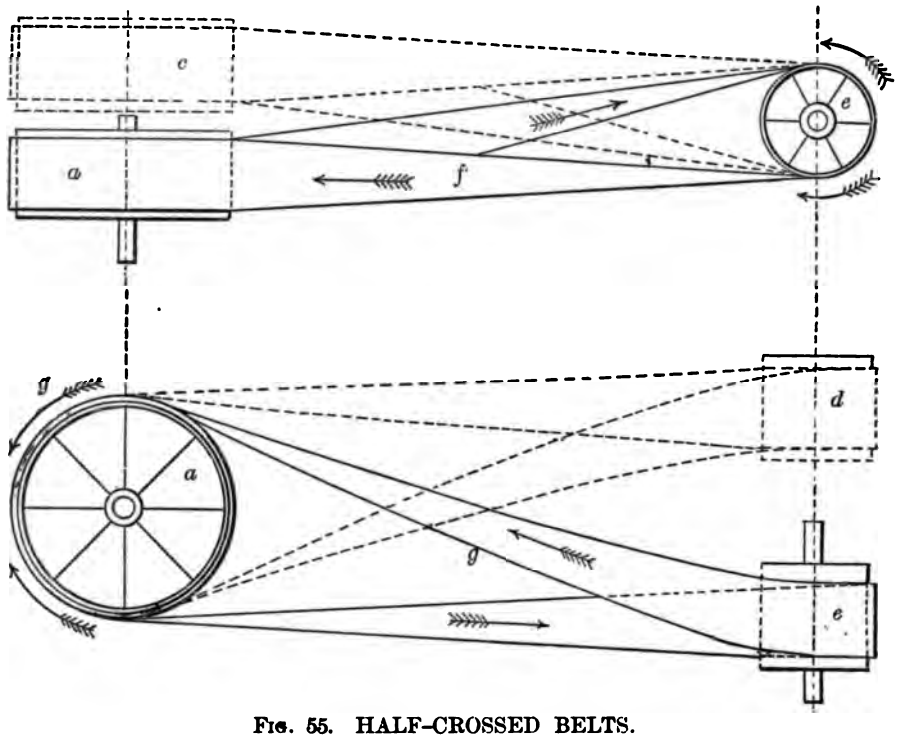

FIG. 55. HALF-CROSSED BELTS.

The drawing is a plan and side view of the same gearing; *a* is the driving pulley and *e* the driven one. The position of the pulleys in the plan above is for the belt *f* and pulley *e*, moving in the direction indicated by the arrows. If the motion of the pulley *e* is reversed, then the driving one has to be shifted to the position shown in dotted lines at *c*, the distance being once the diameter of the pulley *e*.

(CONTINUED.)

NOTES, MEMORANDA.

The second diagram is a side view of the first, illustrating the position of the pulleys *a* and *e* in the other plane, also the change in position of the driven one *e* when the motion of the driver *a* is reversed. The arrows at *g* indicate the course of motion for the positions in the full lines, while the dotted lines show the position when the pulley *a* is reversed, the driving one *e* being raised to *d*, a distance equal to the diameter of *a*.

It is difficult by words or diagrams to convey accurate instructions for arranging such gearing; but there is an old and simple rule which has greater value than more elaborate ones, namely:—"Set the pulleys so the belt will *lead on* to each pulley correctly, and never mind how it *comes off*." The practical value of this rule will appear when its application is attempted.

Change Pulleys.—These are employed for altering the speed and power of machines, especially machine tools. They are an important factor in belt transmission, and perform a function not easily attainable by other means. In the common text books may be found many intricate formulæ for computing the diameters, so as to attain uniform tension of the belts, and but little other information of use in constructing such pulleys.

When there are two cone pulleys of different size, the best way is to measure around them with a tape line until they give a uniform length on each step, keeping the different steps on the same pulley as uniform as possible. In finishing the first pair the same method can be followed, marking the diameters permanently on a gauge, to which calipers may be set in future cases. This is not scientific, but it is practical, and moreover secures exactness without risk and at the least expense.

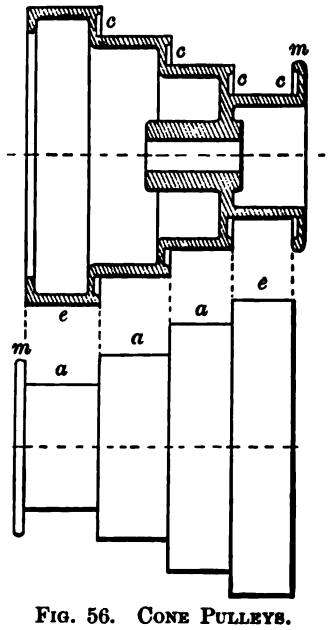

Fig. 56. Cone Pulleys.

The drawing, Figure 56, shows a method of constructing cone pulleys, employed by the author in his practice for many years past, and believed to have many advantages. The faces at *a*, *a*, *a*, *a*, are made flat or parallel. Those at *e* are made slightly convex. The radial faces at *c* are recessed in the manner described in the article on belt flanges. Flanges are employed on one end at *m*; none are required for the large pulley. These flanges are recessed as shown in the drawing. In years of use, none of these cone pulleys have ever injured the edges of belts, while, as may be seen, the cost of construction is much less than by the common method. Both the outside and inside being parallel, the expense of patterns and core boxes is greatly reduced, and in finishing less metal is cut away. The work also requires less time and skill.

NOTES, MEMORANDA.

Unusual Belts.—Round, triangular, and square belts deserve some mention, but the space at command will not permit diagrams and dimensions, besides, the use of such sections is very limited in comparison with flat ones. In England a good many bands of square section are used, especially of the half-crossed kind. They are well suited for this purpose, not being affected by side deflection, so injurious to flat belts. There are also in use bands made of short links of leather, round belts of softened rawhide, and others; but, on the whole, no considerable departures from flat bands, except for special purposes.

CHAPTER VI.

ROPE DRIVING GEARING.

Cotton and Hemp Ropes.—These are now extensively employed for main driving gearing, but by recent experiments are found to consume more power in stripping from the grooves than was at first suspected. The incentive of a lower first cost has led to making the angles more acute in order to secure traction. The wear and loss of power increased accordingly. Modern practice tends to angles of forty degrees, which is a kind of mean between extremes that have been tried. The pulleys should be not less than thirty times the diameter of the rope. The size of the ropes can be assumed at pleasure, and their number arranged accordingly.

The power transmitted by hemp ropes is found by multiplying the square of their circumference in inches by their velocity in feet per minute, and dividing by 4,000. This gives horse-power.

Cotton ropes are much superior to hemp ones, both as to strength and durability. They stand more tension and will perform twenty-five per cent. more duty. In arranging the number of ropes there should always be one more than is required for the work. This gives a spare one for repairs, and provides for accidents. The speed of ropes should be from 3,000 to 6,000 feet per minute. The following table gives the power a single rope will transmit under favorable conditions, in grooves having an angle of forty degrees:

THE BODY OF THE TABLE GIVES HORSE-POWER.

Diameter of Ropes in Inches	1	1¼	1½	1¾	2
Velocity = 2,000 feet per minute	4½	6½	10	15	18
" = 3,000 " "	7	10	15	22	27
" = 4,000 " "	9	13	20	30	36
" = 5,000 " "	11	16	25	37	45
" = 6,000 " "	13	20	30	45	54

REMARKS.—It is preferable to employ three or more ropes. For best cotton ropes add twenty-five per cent. to the horse-power given.

NOTES, MEMORANDA.

Wire Ropes.—This method of transmitting power is one of recent adoption, and not employed to any extent previous to 1850. Since that time it has increased rapidly, as the manufacture of suitable ropes went on, until the permanent and extensive applications have reached thousands. The mathematical data relating to the system, like that for flat belts, is exact only when all the operating conditions are assumed, and these are extremely variable.

The aggregated weight of driving gearing of this kind, in proportion to power transmitted, is only one fiftieth as much as for direct shafts. The cost is not more than one twelfth as much as for belts, and one twentieth as much as shafts, for distances exceeding 100 feet.

The working strain of wire ropes should not be taken at more than one fifth their ultimate strength, as follows:

WORKING STRAIN FOR RUNNING WIRE ROPES.

Diameter of Ropes in Inches.....	3/8	7/16	1/2	5/8	3/4	7/8	1
Working Strain in Pounds, Iron Ropes	1100	1500	2000	3000	4500	6000	8000
Working Strain in Pounds, Steel Ropes	1600	2000	3000	4500	6000	8500	12000

The following table gives, approximately, the power that can be transmitted with ropes of suitable diameter on pulleys from three to twelve feet diameter, at different velocities. If larger or smaller ropes are employed, the power transmitted can be estimated accordingly.

HORSE-POWER TRANSMITTED BY WIRE ROPES.

Diameter of Wheels in Feet.	Diameter of Ropes in Inches.	Number of Revolutions per Minute.								
		50	75	100	125	150	175	200	225	250
3	3/8	2	3	4	5	6	7	8	9	10
4	3/8 to 1/2	3	4	5	6	7	8	10	12	15
5	7/16 to 9/16	5	7	9	12	15	18	20	24	
6	1/2 to 5/8	6	9	12	15	18	21	25	27	
7	9/16 to 11/16	12	18	24	30	36	42	48		
8	5/8 to 3/4	18	26	34	42	50	60	75		
9	11/16 to 7/8	25	35	45	60	75	90			
10	3/4 to 1	50	70	90	110	130				
12	7/8 to 1 1/8	65	90	120	155					

Remarks.—The horse-power given is a minimum, when the working conditions are favorable. The size of the ropes can be larger than those given in the table, but a safe rule is to not have the diameter of pulleys less than 100 times that of the ropes. For winding drums, fifty diameters will do. Flexible cores of fibrous material increase the efficiency of wire ropes.

NOTES, MEMORANDA.

Wire-Rope Pulleys.—These are made of cast iron, and filled with gum or leather, as shown in Figure 57. Other kinds of filling, such as wood, and tarred hemp, have been used, but gum or leather is best. These pulleys should run at high speed, and require correct proportions, and careful balancing. The castings should be of good iron and free from cooling strains, the rims being of deep section and inflexible.

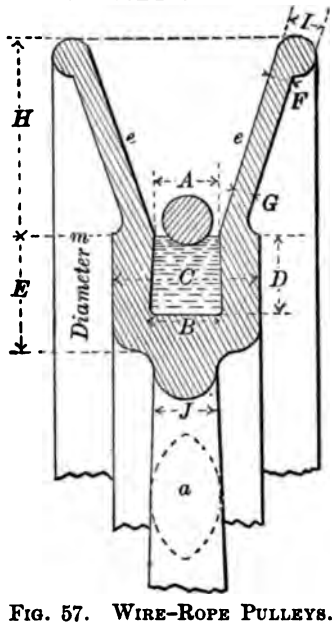

FIG. 57. WIRE-ROPE PULLEYS.

It is a singular fact, applicable to these pulleys as well as to nearly all gearing for transmitting power, that its progress has been far behind machinery for generating and applying power. Pulleys of the present kind are often made with their spokes braced by thin webs at the side so as to offer a large surface to the air, and act like a fan wheel. The retardation thus caused produces loss of power at high speeds, and is, moreover, clumsy practice, because the lateral strains do not demand such bracing. The spokes should be solid and elliptical in section, as shown at *a*.

The dimensions in the following table correspond with good practice, and will be found suitable for general purposes.

Diam. of Pulleys in Feet.	Dimensions in Inches.									
	A	B	C	D	E	F	G	H	I	J
3	5/8	3/4	1 3/4	3/4	1 3/8	1/4	3/8	2	9/16	7/8
4	3/4	7/8	2 1/8	7/8	1 1/2	5/16	7/16	2 1/2	5/8	1
5	1	1 1/8	2 3/8	1 1/8	1 3/4	3/8	1/2	3	3/4	1 1/8
6	1 1/8	1 1/4	2 5/8	1 1/4	2	3/8	1/2	3 1/2	3/4	1 1/4
7	1 1/8	1 1/4	2 3/4	1 1/4	2 1/8	7/16	9/16	3 3/4	7/8	1 3/8
8	1 3/16	1 3/8	2 7/8	1 3/8	2 1/4	1/2	5/8	4	1	1 1/2
9	1 5/16	1 1/2	3 1/8	1 1/2	2 1/2	1/2	5/8	4 1/4	1	1 5/8
10	1 1/4	1 1/2	3 1/4	1 1/2	2 1/2	9/16	11/16	4 1/2	1 1/8	1 3/4
12	1 1/2	1 3/4	3 5/8	1 3/4	3	5/8	3/4	4 3/4	1 1/4	2

REMARKS.—The proportions of flanges are rapidly increased to prevent danger of breaking in handling the larger pulleys. The angle at *e* should be thirty to sixty degrees, or one inch in four. The filling requires to be driven in hard in order to resist centrifugal force. If the dimensions *A* and *B* do not suit for commercial sizes of gum, they can be changed to conform. To find the price of pulleys, well finished, filled with leather or gum, bored to fit, and keys cut: multiply the square of the diameter by three, for the price in dollars. For a pulley four feet in diameter: $4 \times 4 \times 3 = \$48.00$.

NOTES, MEMORANDA.

Arrangement.—Wire ropes for transmission should not be less than 200 feet in length, unless tension pulleys are employed, and when the length exceeds 800 feet, intermediate pulleys are required. It is generally better to use counter-shafts than bearing pulleys when a line exceeds one span. In this way the range of deflection is reduced, and span sections of rope are more easily put on in case of accident. The expense is not much more if double-groove pulleys are employed, and the wear is less than with bearing pulleys, which, for some reason not well known, wear more than driving ones.

CHAPTER VII.

HYDRAULIC TRANSMISSION.*

General Remarks.—Since the introduction of the hydraulic system of transmitting and applying power, more than thirty years ago, there has been continuous progress, both in methods and the extent of use.

The following extract from a paper by the author, read before the Technical Society, San Francisco, 1886, gives in a condensed way the characteristics of hydraulic transmission:

"Water, as a medium for conveying power, has its chief feature in its inelasticity. Its action is positive and absolute, more so than shafts or gearing. Its compressibility is less than that of the hardest metals; so that long after metallic bearings have reached their limit of pressure, or pressure with movement, water remains unaffected. There is machinery operating under a pressure of 5,000 pounds to the square inch, which far exceeds the endurance of hardened steel surfaces under movement.

"These qualities of positive movement, sustaining extreme pressures, and the facility with which movement is varied by a simple change of area, meet so many demands in modern industrial requirements, that hydraulic apparatus seems indispensable. Its substitution of multiplying and diminishing gearing alone is an important fact in modern mechanics. If a movement of one hundred feet is to be reduced to one foot, and the intensity increased accordingly, all that is required are two pistons, one of twelve inches diameter, the other of one inch diameter. Friction is almost eliminated. There is no noise, heat or danger, and the cost of construction is not much, if any, more than for simple lever having these ratios of movement.

"I will also point out the functions of water as an abutment to guard against return movement. Any elastic medium employed under pressure becomes a source of danger from explosion or release, and, besides, does not perform the function of abutment, so desirable in hoisting passengers and goods. So important is this last-named matter that it is common to erect steam or gas engines to operate hydraulic apparatus placed between the motive power and the hoist. When one estimates the amount of detail such an arrangement involves, they can see the value attached to the inflexible water abutment below the load."

---

* The various quantities, mechanism, and so on, pertaining to hydraulics, will appear in a future section. The present chapter will, therefore, form only an essay on the subject.

NOTES, MEMORANDA.

In transmitting power by water, the most economical pressure is from 600 to 800 pounds to the inch. This pressure can be conveyed in cast iron pipe, six inches bore and one inch thick, with a loss of not more than two and one half per cent. per mile. In London, and several other English cities, where there are extensive systems of hydraulic transmission, the cost of the power has been from three to five cents per 100 foot tons, and in some cases less than two cents.

The main objection to hydraulic transmission is the loss of power when variable work is performed. Water, being inelastic, the power consumed in any given work performed by pistons is not measurable by resistance, but by volume or movement, so it requires the same amount of water for a certain range of movement, whether the load or work be much or little. In a common hydraulic elevator, for example, it requires the same amount of water to raise 100 pounds that it does to raise 1,000 pounds. Differential pistons and gearing of various kinds have been applied to meet this difficulty, but with indifferent success; the additional gearing and complication consuming in first cost and maintenance all that is saved in initial power.

Sir William Armstrong, more than thirty years ago, introduced differential pistons for variable loads, but found their application inexpedient, for the reasons given. This branch of the subject comes within a general rule applicable to all hydraulic operations, namely: that internal sliding pistons are always inexpedient, and that in all hydraulic apparatus the sliding contact should be by means of rams working through packing glands. Another rule that may be added, is that if internal close-fitting pistons are employed, all the parts exposed to water should be of non-corrosive metal.

In designing hydraulic apparatus of every kind, these rules should be followed, unless the water is circulated and can be mixed with lubricating liquids, even then, corrosive metals are objectionable. Hydraulic transmission is especially adapted for rectilinear movement, and the conversion to rotary motion has, thus far, not been attended with complete success. Jet wheels of the Girard type are the most direct and simple means of applying high pressure to produce rotary movement, but the system has its objections.

Water engines with sliding pistons are open to the objections already named, but the employment of ram pistons sliding through glands gives, at the present time, promise of yielding a good percentage of effect with a low average of wear and maintenance.

The high velocities of jet wheels, and the low velocity of water engines, fail in a measure to meet common requirements, but, on the whole, there is no doubt of a final successful application of high pressure water to produce rotary as well as rectilinear motion in power transmission.

NOTES, MEMORANDA.

CHAPTER VIII.

STEAM, AIR, AND GAS TRANSMISSION.

Steam Transmission.—From the circumstances attending on the general use of steam power it is fair to assume that it has reached its full extent as a means of transmitting power. It is always conveyed to some distance from the point of generation, and the incentives to extend this distance exist everywhere; so the only improvement to be looked for is in the avoidance of condensation and the danger inseparable from dealing with an elastic gas at a temperature of 300 degrees.

Steam conveyance is essentially heat conveyance; its value is in the amount of heat contained, and this escapes through plates of metal more readily than through a stratum of air of equal thickness.

There are many instances, in New York for example, where power distribution has been successfully performed by steam, but in such cases the double function of conveying heat, as well as power, was the object, heat being the principal one. The high temperature of steam machinery, danger of explosion, and the special skill required for the care of engines, are conditions unfavorable to its use for transmission, except within the limits of an establishment where different departments can be driven by separate engines, and on steam vessels where steam is at hand in any case.

The economy of steam transmission is all that can be desired when pipes can be so protected as to avoid much loss by condensation. Its rapid flow and low resistance by friction are favorable, but, as at first remarked, the system has been pushed to the limit of successful application, in general practice.

Air Transmission.—The transmission of power by air has been extensively applied in Birmingham, England, and at Paris, France. The first by compressed air, or direct pressure; the latter by positive, and also by induced or negative pressure; in both cases with commercial success. These two, with many other less extensive applications, point to success only when there are peculiar local conditions favoring the system, such as wide diffusion in small powers, the avoidance of danger in densely populated districts, and supplementary use of the air for ventilation.

When air is suddenly compressed, the tension of the reduced volume is due in part to the mechanical force applied, and partly to heat, the smaller volume containing nearly the same amount of heat the greater one did. It is therefore evident that so much of the tension or pressure as is due to heat, had to be overcome by the compressing power; and as this heat soon passes off by radiation the force it represents is lost. The same thing occurs in

NOTES, MEMORANDA.

lowering the pressure, or in giving off power. The temperature of the air falls by expansion, and its effective volume is reduced accordingly, so the loss is, as before stated; leaving only forty-five per cent. or so for working effect. This loss can be, and is to a great extent, avoided by cooling the air during compression, by well known methods; but in the best examples that can be referred to, as at Mont Cenis, the power utilized is not more than forty per cent., and is often less. There is also the difficulty of freezing at the point of release when high pressure is employed; of detecting leaks, in the absence of both color and odor, and the want of lubricating properties where piston machinery is employed. There is also the impediment of large pipes, required because of low pressure, and there is but little prospect of an extensive use of this method of transmission.

Gas Transmission.—The conveyance of power by gas employed in what may be called explosive engines, has extensive application, being an adjunct of illuminating systems. There is the advantage over air or steam, of the conveyed volume being much less than the working one, also the smaller size of pipes. Some of this last-named advantage is lost, however, in the lower tension employed. Gas engines not being an article of general manufacture at the present time, the system does not involve any constructive features that require treatment here.

ELECTRICAL TRANSMISSION.

General Remarks.—It is a matter of regret that this important branch of modern engineering can occupy but a limited place in a work of the present character. The terms employed, and much less the formulæ and quantities involved, are not understood, even among skilled people not connected with this branch of engineering; and its constructive features, except motive power and driving gearing, have no place in a general machine works.

The importance of electrical transmission is so great that it is difficult to comprehend, or even conjecture, its future place in engineering and manufacturing industry. It promises not only to supplant other methods to a great extent, but to open up new fields in the utilization of natural forces, not hitherto available.

The most important features of electrical transmission are the facilities it affords for the division and distribution of power from central generating stations, and furnishing at the same time light, devoid of heat. The system of accumulation, if ever perfected, with a higher economy of transmission, will complete the ideal of power transmission and distribution.

(CONTINUED.)

NOTES, MEMORANDA.

At present, the first cost of electrical transmitting apparatus is considerably more than by other methods, for short distances, but becomes cheaper as distance increases. The following interesting table is taken from a recent authority on the subject,* and shows how rapidly the relative cost of electrical transmitting plant diminishes with distance.

COST OF PLANT PER HORSE-POWER.

5 H. P. Transmitted.					100 H. P. Transmitted.				
System of Transmission.	Distance in Yards.				System of Transmission.	Distance in Yards.			
	110	1100	11000	22000		110	1100	11000	22000
Electric.....	$375	$405	$710	$1050	Electric.....	$160	$175	$295	$435
Hydraulic.....	225	485	3050	6400	Hydraulic.....	70	140	820	1550
Pneumatic.....	365	1050	5450	10300	Pneumatic....	130	170	545	960
Wire Rope.....	37.50	305	3800	6100	Wire Rope....	5.50	45	405	810

Remarks.—The amounts in the original table are in sterling; for convenience they have been changed to dollars, at the rate of five dollars to the pound. The cost of plant, comparing wire ropes and electrical apparatus, seems to balance at a distance of one and a half to two miles.

The following table from the same authority shows the cost of power generated by steam and water, transmitted to long distances by different systems. The cost of initial power, included in the table, was computed by Professor Grove.

COST PER HORSE-POWER PER HOUR.

5 H. P. Generated by Steam.					100 H. P. Generated by Steam.				
System of Transmission.	Distance Transmitted in Miles.				System of Transmission.	Distance Transmitted in Miles.			
	.064	.64	6.4	12.8		.064	.64	6.4	12.8
	Cents.	Cents.	Cents.	Cents.		Cents.	Cents.	Cents.	Cents.
Electric.....	4.5	4.82	5.58	10.4	Electric.....	3.58	3.82	5.36	8.16
Hydraulic.....	5.0	6.30	21.0	38.0	Hydraulic.. ..	3.24	3.56	8.30	13.68
Pneumatic.....	5.4	6.60	19.06	33.44	Pneumatic....	4.0	4.18	6.20	9.0
Wire Rope.....	2.26	3.76	20.8	45.40	Wire Rope....	2.14	2.44	17.66	19.46

Remarks.—The original quantities were in yards and pence, but are converted to miles and cents for convenience.

* Mr. William Geipel, Edinburgh, Proceedings Society of Mechanical Engineers, London, February, 1888.

NOTES, MEMORANDA.

SECTION THIRD.

CHAPTER IX.

STEAM MACHINERY.

General Remarks.—In the present section the purpose will be to deal with the common mechanism of steam engines as distinctively as possible. The science of Steam, as it may be called, is a different subject, but the two things are so connected that the properties of steam is in some cases essential to an understanding of the mechanism of steam machinery, and to that extent will be included here.

Steam machinery forms a large part of all that is in common use. It involves many obscure and unsolved problems, but with the array of constructive and scientific talent now directed to the subject it will no doubt soon become a settled science or art. This remark applies to the use of steam, but not to its generation, or the utilization of heat. In this department it is reasonable to expect important improvements.

Steam engines in common use may be classed as follows:

Slide-Valve Engines.—This name is applied to steam engines in their most simple form, arranged with one valve to perform admission, cut-off, and release at predetermined points of the stroke, the speed being controlled by the pressure or by throttling, as it is called.

Fixed Cut-off Engines.—These engines are arranged with a supplemental valve for closing the induction ports at an earlier point of the stroke than is possible when a single valve is employed, the point of cut-off, or the range of admission, being uniform.

Adjustable Cut-off Engines.—These engines are also provided with supplementary valves for closing the induction ports at various points of the stroke, the range of admission being adjustable at pleasure, but not employed to regulate speed.

Variable Cut-off Engines.—This name is applied to that class wherein regulation of speed and power are performed by the range of admission, the point of closing the induction valves being determined by a governor.

NOTES, MEMORANDA.

Automatic Engines.—This name is applied to engines with a single valve arranged for regulation, by the range of admission and also by compression, due to trapping the steam on the exhaust side of the piston.

Compound Engines.—This term is employed when two or more engines are combined, the steam passing from one to another to attain a lower degree of expansion than is possible, or expedient, in a single cylinder.

Differential Engines.—In this type of engines the area of the initial side of the piston is reduced by a trunk. The steam is passed from the trunk to the other side of the piston, acting on an area equal to the trunk and the annulus on the first side. In this way a low expansion can be attained with a simple slide valve.

Single-Acting Engines.—These have generally two pistons, the steam acting on one side only, so the strains are in one direction, and the various joints for this reason not requiring adjustment; as, however, the accelerated motion on the return stroke outruns the cranks, a high degree of compression is required to prevent knocking. These engines are adapted for high rotative speed.

Various Engines.—Besides the types named there are Rotary Engines, Swash-Plate Engines, Turbine Engines, and others of exceptional use, not requiring description here.

This wide range of modification is very remarkable. It arises from attempts at adaptation to various purposes and the application of numerous inventions in the mechanism of engines, especially for valve-actuating gearing. There is no sufficient reason for such a varied practice. The function of nearly every engine is to turn a shaft at an uniform rate of speed and with as much force as possible with the amount of steam consumed.

Marine engines constitute the class of most distinction. They have to go into crowded spaces, be tossed about in various positions, operate far away from places of construction and repairing, yet can claim the highest economy of any class, and the greatest endurance. This is the result of a concentration of the highest skill in their construction, an abundance of cold water for condensing and cooling, a high class of boilers, and intelligent attendance.

Notes on Steam Engines.—The power of an engine is rated from three things,—namely, the pressure of the steam, the area of the piston, and the speed at which it moves.

These things, taken together, make up, or indicate, with certain allowances, the actual work an engine will perform. The power of an engine is affected directly as either of these three things are varied.

(CONTINUED.)

NOTES, MEMORANDA.

The amount of useful power given off is less than that indicated. Ten per cent. or more is lost in friction and the resistance of transmitting gearing.

Nominal horse-power, now almost out of use, relates to a certain amount of cylinder capacity. It is a commercial term employed to designate the size of engines.

High piston speed reduces the weight of an engine accordingly, and high rotative speed reduces the weight and cost of main shafts, fly wheels, and other transmitting gearing.

Roughly estimated, three square inches of piston area represent one nominal horse-power, and one and a half square inches an indicated horse-power. This supposes average working conditions.

For pumping water the duty of engines is commonly rated in foot-pounds for each one hundred pounds of coal. The average duty of Cornish engines is from 70,000,000 to 85,000,000 pounds.

For engines exceeding fifty horse-power, condensing apparatus should be employed in all cases where water is obtainable. The additional mean pressure gained, or saved, is from ten to thirteen pounds per inch.

The amount of feed water required for engines working under fair conditions is from 17 to 30 pounds, or 2 to 3.6 gallons an hour for each horse-power. For condensing, the amount of water required is twenty times as much.

The amount of good coal required for an engine of fair economy is two to four pounds per hour for each horse-power. The best marine engines of the present time consume less than two pounds.

The capacity of boilers is usually computed from the amount of heating surface exposed to the fire, the average being one horse-power for each fifteen square feet of heating surface.

HORSE-POWER OF ENGINES.

Nominal Horse-Power.—This term is employed as a measure for the size of engines, and relates to the cubic contents of cylinders. It has almost gone out of use, because the conditions of speed and pressure assumed do not apply to modern practice. For commercial purposes and for those not acquainted with mechanics, it is a convenient form for defining the size of engines.

The nominal horse-power of a modern high-pressure engine is about four tenths of its actual power. A rule for computing is to multiply the square of the cylinder's diameter in inches by the cube root of the stroke in feet and divide by four.

Indicated Horse-Power.—This term is employed to define the pressure exerted by the pistons of engines, and is the mean pressure multiplied by the area of the piston in inches and by the velocity in feet per minute. This gives foot-pounds,—that is, pounds raised one foot high in a minute. 33,000 of these foot-pounds are estimated at one horse-power, so that dividing by this number gives indicated horse-power.

(CONTINUED.)

NOTES, MEMORANDA.

Actual Horse-Power.—From the indicated power of an engine there must be deducted certain losses by friction in the engine, friction of transmitting machinery, clearance at the ends of the cylinder, and leaks; so the actual performance of engines, estimated from a second mover, is commonly ten per cent. less than the computed or indicated power.

Indicating Diagrams.—The working power of engines is seldom computed, but ascertained by means of indicators, which produce a diagram described directly by the pressure in the cylinder. A small piston is exposed to the same pressure, and acts against a spring of known resistance. The movement of this small piston is transcribed on a piece of paper having a movement coincident with the engine piston.

By measuring the movement of the small piston at various parts of its stroke the corresponding pressure in the main cylinder is found. Various other conditions of an engine's operation are ascertained in this way. The subject is too extensive to be treated here, and should be studied from books devoted to it.

Mean Effective Pressure.—The following table shows the mean or average pressure in a cylinder when steam at various pressures is cut off at different points of the stroke.

MEAN PRESSURE OF STEAM IN CYLINDERS.

Initial Pressure of Steam in Lbs.	Portion of the Stroke where Steam is cut off.					
	¾	⅝	½	⅜	¼	⅛
20	19.3	18.4	16.9	14.8	11.9	7.7
30	29.0	27.5	25.4	22.3	17.9	11.5
40	38.6	36.7	33.8	29.7	23.8	15.4
50	48.3	45.9	42.3	37.2	29.8	19.2
60	57.9	55.1	50.7	44.6	35.7	23.1
70	67.6	64.3	59.2	52.1	41.7	26.9
80	77.3	73.5	67.7	59.5	47.7	30.8
90	86.9	82.7	76.1	66.9	53.6	34.6
100	96.6	91.5	84.6	74.4	59.6	38.5
110	106.2	101.1	93.1	81.8	65.6	42.3
120	115.9	110.3	101.5	89.3	71.5	46.2
130	125.6	119.1	110.0	96.7	77.5	50.0
140	135.2	128.6	118.5	104.1	83.4	53.9
150	144.9	137.8	126.9	111.6	89.4	57.7

NOTES, MEMORANDA.

Volume and Temperature of Steam.—The relation between pressure, volume, and temperature of steam is shown in the table below. The pressure and volume, it will be seen, are in nearly an inverse ratio, while temperature follows a law not definable, without intricate formulæ.

Pressure in Pounds .	10	20	30	40	50	60	70	80	90	100
Volume	2358	1229	838	640	518	437	378	333	298	270
Temperature	193	228	250	267	281	292	303	312	320	328

(CONTINUED.)

Pressure in Pounds .	110	120	130	140	150	160	170	180	190	200
Volume	247	227	211	197	184	178	164	155	148	141
Temperature	334	341	347	352	358	363	368	372	377	381

The Flow of Steam.—The velocity at which steam flows in pipes and through apertures is governed by the same law as the flow of liquids, if the gravity is considered. It is more convenient, however, to compute the flow from temperature as follows: $V = 60\sqrt{T + 460}$, or the velocity in feet per second equals 60 times the square root of the degrees of temperature with 460 added. The flow is nearly uniform at different pressures, and the following table will answer for nearly all cases without further calculation.

THE FLOW OF STEAM.

Pressure in Pounds per Inch	25	30	45	60	75	100	150
Velocity in Feet per Second	863	867	877	885	891	898	908

Area of Steam Ports.—The area of steam ports is from one tenth to one twentieth the area of steam cylinders, according to the speed of the piston and some minor conditions.

From the table given it will be seen the flow of steam is almost independent of pressure, so the area of passages depends upon volume alone. Volume being a resultant of piston area and speed, the size of ports is found from area, stroke, and revolutions multiplied together.

The following rule accords with common practice: Multiply the area of the cylinder in inches by the stroke in inches and by the number of revolutions per minute, then divide by 35,000 for steam ports and by 27,000 for exhaust ports.

Pipes should be fifty per cent. more in area.

Example: Cylinder, 12 inches diameter; stroke, 24 inches; 120 revolutions per minute.

(CONTINUED.)

NOTES, MEMORANDA.

$$\text{Area} = 113 \times 24 \times 120 = \frac{325440}{35000} = 9.29 \text{ inches, area of steam ports.}$$

$$\frac{325440}{27000} = 12.05 \text{ inches, area of exhaust ports.}$$

Engine Slide Valves.—The valves of engines, with their actuating gearing, is an extensive and complicated subject, if it includes link motion and what is called radial gearing, but plain slide valves admit of easy development by means of diagrams.

The method shown in Figure 58 is as simple as any that can be referred to, and is complete enough for practical purposes.

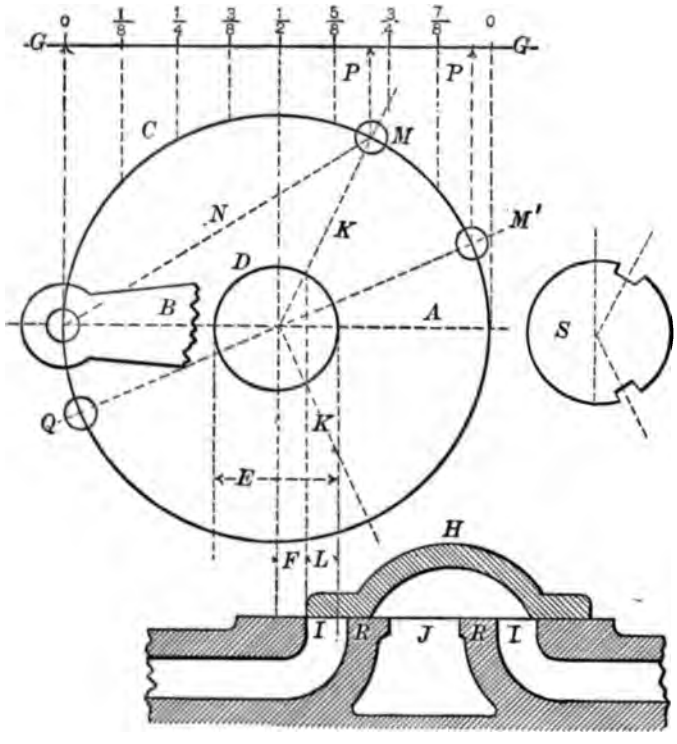

FIG. 58. SLIDE-VALVE DIAGRAM.

NOTATION.

A, the center line.
B, the crank.
C, the crank circle.
D, the circle of the eccentric.
E, the stroke of the valve.
F, the lap of the valve, outside.
G, the stroke of the piston, in eighths.
H, common slide valve.
I, *I*, steam ports.
J, exhaust port.
K, *K*, angles of advance, *R* and *L*.
L, the distance the ports open.
M, point of admission.
P, *P*, positions of the piston.
S, diagram for key-ways.
Steam admitted at *B*; cut off at *M*; exhaust opens at *M'* and *Q*.

(CONTINUED.)

NOTES, MEMORANDA.

To construct a diagram of the kind, first draw the crank circle *C*, then the point of lap and cut off being determined from the table below, draw the eccentric circle *D*. The stroke *E* is twice the lap *F* and twice the distance *L*. Then lay out the ports *I*, *J*, *I*. The angle of advance is found by drawing a line from the center to *M*, which is the crank point of admission and cut off.

By taking the distance *N* in the dividers, the position of the valve or crank can be found, one from the other, by drawing lines to the center, and from their intersection with the eccentric circle *D*. Vertical lines, as at *P*, *P*, show the position of the piston with reference to the crank.

For plainer illustration of this method the diagram can be supposed to have dimensions as follows:

A = stroke of piston	12 inches.	*I* = width of steam ports . . .	1¼ inches.
E = stroke of valve	3½ inches.	*J* = width of exhaust port . .	2 inches.
F = lap of valve	¾ inch.	*R* = width of bridges	1 inch.
L = opening of ports	1 inch.	*K* = angles of advance	25 degrees.

Lap of Valves.—The following table gives the lap of engine valves required to cut off steam at various points in twenty fourths of the stroke. The lap is found by multiplying the stroke of the valve by the decimal in the lower line.

LAP OF ENGINE VALVES.

Portion of the Stroke cut off	$\frac{1}{24}$	$\frac{2}{24}$	$\frac{3}{24}$	$\frac{4}{24}$	$\frac{5}{24}$	$\frac{6}{24}$	$\frac{7}{24}$	$\frac{8}{24}$	$\frac{10}{24}$	$\frac{13}{24}$
Lap of Valves in parts of their Stroke . .	.10	.14	.17	.20	.22	.25	.27	.28	.32	.35

REMARKS.—When a valve is to have lead, one half the lead must be subtracted from the lap given by the table.

Cost of Engines.—Variable cut-off engines exceeding fifty horse-power, of a good class, with boilers and all required fittings, cost at the works from thirty to forty dollars for each indicated horse-power.

The cost of engines alone is generally as the square root of the cubic contents of their cylinders in inches. This quantity multiplied by 10 for the lower class and by 20 for the higher class will give approximately modern prices for engines in dollars. For example: An engine of 10-inch bore and 20-inch stroke contains 1570 cubic inches. The square root of this is 39.6. Multiplied by 10 and by 20 gives

$$39.6 \times 10 = \$396. \qquad 39.6 \times 20 = \$792.$$

Multipliers between 10 and 20 can be used for intermediate classes.

NOTES, MEMORANDA.

Locomotive Slide Valves.—The following example, by Mr. P. Van Brock, will illustrate locomotive practice. It is also applicable to any pair of engines connected at right angles.

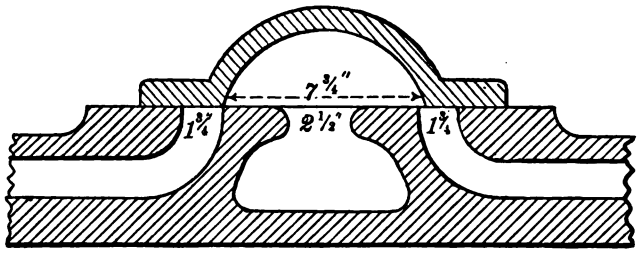

FIG. 59. LOCOMOTIVE SLIDE VALVE.

The following notation applies to the diagram above:

Angle of eccentric to crank	130°.	Outside lap of valve	1⅞ inches.
Width of steam ports	1¾ inches.	Outside lead valve	⅛ inch.
Steam ports, open	1¼ inches.	Inside lead valve	½ inch.
Stroke of the valve	6⅛ inches.	Width of exhaust port	2½ inches.

Steam follows 64 per cent. of the stroke. Exhaust, at 85 per cent. Compression, .06 per cent. This applies to the forward stroke. The back stroke will vary as the length of connecting rods.

Engine Frames.—Frames for steam engines are of two kinds or classes,—one that may be called balanced and the other overhanging. The first includes engines with double cranks, and in some countries—France, for example—nearly all engines, except those of large size.

Overhang engines, with a single crank on a projecting end of the shaft, are so made for convenience, and to meet some of the assumed rules of practice now being abandoned,—the diameter of crank pins for one.

In the diagrams *A* and *B*, Figure 60, are indicated the lines of stress *c*, and lines of connection *a* for double and single crank engines. In the diagram *B* the dimension *C*, representing the overhang of the crank, is the measure of horizontal deflective strain on the framing.

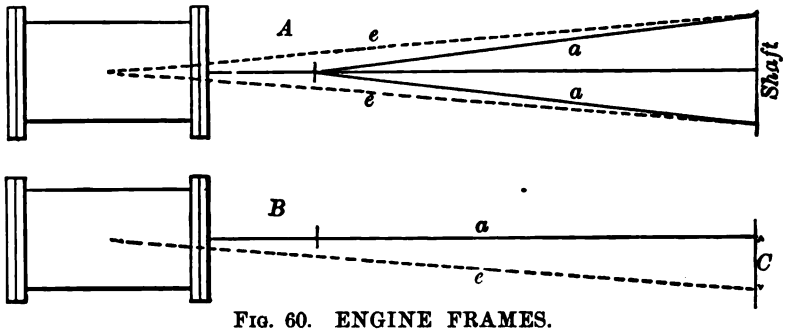

FIG. 60. ENGINE FRAMES.

(CONTINUED.)

NOTES, MEMORANDA.

There is no difficulty in distributing the metal along the lines *e*, *e*, in the diagram *A*, but in the other case, diagram *B*, such attempts have produced a variety of forms so numerous and varied as to defy description. If there was nothing to deal with but the strains, practice would perhaps be very uniform, but the contour of frames has to meet the requirements of various mountings, such as cross-head guides, main bearings, valve gearing, pipe connections, holding-down bolts, and so on.

The following rule indicates the tendency of modern practice:

(1) To employ framing of box section (2) follow the lines of strain as nearly as possible; (3) bolt the framing down whole length to foundations; (4) shorten the dimension *C*—the overhang—as much as possible.

In respect to the method of bolting down frames, the necessity and extent of this depends upon deflective strain in a vertical plane, but it is hard to imagine a sufficient reason in any case for mounting an engine frame on legs or standards, leaving the foundation no other function than that of supporting the weight. It is certainly bad practice to provide an expensive foundation that is wholly inflexible and then not connect an engine frame to the foundation, except by a few insufficient surfaces under legs. The method is passing away as the stroke of engines and their frames are shortened.

There is generally nothing saved by setting an engine frame on standards. The sections in that case have to be, or ought to be, immensely stronger than if a frame is continuous on its foundation.

Overhung Cranks.—The dimension *C* in Figure 60 is commonly made a great deal more than is required. There are, however, a good many engine makers who are reducing this dimension to its smallest limits.

Figure 61 illustrates this matter, the dimension *a* corresponding to *C* in the former diagram.

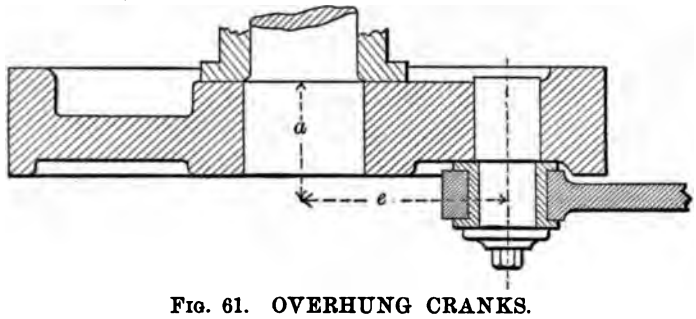

FIG. 61. OVERHUNG CRANKS.

By careful designing the dimension *a* can be reduced to one half of *e*, or one fourth the stroke of an engine, and still leave ample bearing for secure fitting.

It must be remembered that this dimension is not a measure of deflective strain on a main frame alone, but also on the main shaft, crank pin, and crank plate.

NOTES, MEMORANDA.

Crank Shafts.—The main shafts of steam engines, like most other details, are made more from the deductions of practice and experiment than from computed rules. High speed, automatic regulation, and the maintenance of bearings have to be considered as well as normal strains. The following dimensions are suitable for average practice:

Diameter of Cylinders in Inches	6	8	10	12	14	16	18	20	24	30
Diameter of Shafts in Inches	3	4	5	6	7	7½	8	8½	9	10

Crank Pins.—The diameter of crank pins is being constantly increased in modern practice. Formerly, when exact fitting was difficult to attain, the speed of surfaces was more regarded than area and pressure. Marine practice has demonstrated the value of surface and the reduction of pressure, also, that speed, within any reasonable limit, can be disregarded if pressure is reduced accordingly.

Most rules for the dimensions of crank pins are based on strain alone, but this is incorrect in modern practice. The following proportions are suitable for the crank pins of common high-pressure engines with overhung cranks.

DIMENSIONS FOR CRANK PINS.

Diameter of Cylinders in Inches .	6	8	10	12	16	20	24	30
Diameter of Crank Pins in Inches .	2	2½	2¾	3¼	4	4½	5	6
Length of Pins in Inches	2½	3	3½	4	5	5½	6	7

In the case of double cranks, with a single bearing at each side, the diameter of the pins should at least be equal to that of the main bearings.

Engine Fly Wheels.—The weight of fly wheels should be from 50 to 100 pounds for each indicated horse-power for an engine, varied as the diameter, speed, and requirements for steady motion.

The diameter can be from three and one half to four and one half times the stroke of an engine, and the velocity of the rim 50 to 80 feet per second.

The section of the rims can be found, after the weight is determined, by dividing one tenth of the weight in pounds by the mean diameter in feet. This will give the area of the rims section in square inches.

In formulæ for computing the weight and dimensions of fly wheels there are factors of velocity, diameter, steam pressure, and stroke of engines, but the requirements of use are so varied that general rules will not apply in many cases.

For many purposes there is no need of wheels heavy enough to insure uniform motion. In other cases—driving electrical dynamos, for example—heavy wheels are essential.

NOTES, MEMORANDA.

Main Bearings.—The main bearings of engine shafts have suffered a good deal by ingenious improvements and details. Those which perform the best are the most simple and least expensive. Figure 62 shows one of the best designs that can be referred to.

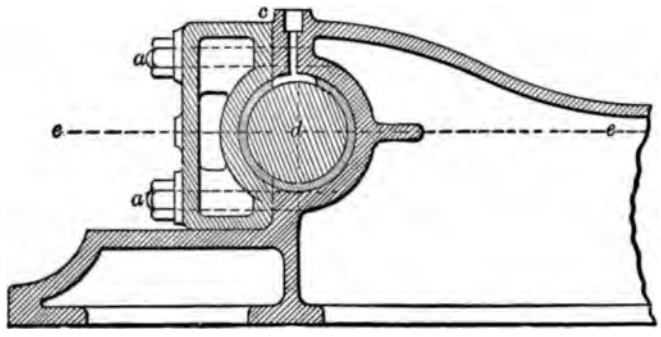

FIG. 62. ENGINE MAIN BEARING.

It is simply a plain, capped journal box, adjustable directly in the line of strain and wear, with heavy proportions and no details, except the cap and strong parallel bolts, as shown. The bearing is not parted in the center, vertically, but to one side, so the shaft will lay in its seat with the cap removed.

The cap is a strong, inflexible piece, resting on a planed surface at the bottom, and the whole analogous to common marine practice.

In practice the difficulties of maintaining main bearings of engine shafts seem to diminish as their size is increased, either by the avoidance of flexure or pressure, or both. The remarks respecting crank pins apply to main bearings as well.

CHAPTER X.

CONNECTING RODS.

General Remarks.—Connecting rods for steam engines and other machinery involving crank motion are made under a great variety of forms, even for particular purposes. They are subjected to severe strains, and their compensating joints are the most difficult of all to maintain.

Box-end rods, or capped bearings, are employed in all cases for marine engines, and their use is extending for all purposes. They are nothing more than a common journal bearing in their arrangement. For small pins, strap ends or mortise ends are neater and better, but are more expensive.

Box Ends.—This name applies to the plain split bearing, with parallel bolts, as shown in Figure 63. For large pins they are lighter in weight and occupy less room than strap joints.

(CONTINUED.)

NOTES, MEMORANDA.

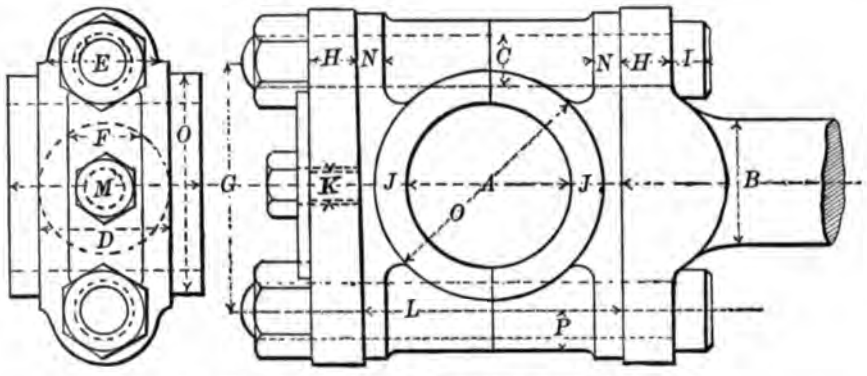

FIG. 63. BOX END FOR CONNECTING RODS.

DIMENSIONS IN INCHES.

A	B	C	D	E	F	G	H	I	J	K	L	M	N	O	P
2	1¾	⅞	1⅞	1¾	¾	3¼	¾	¾	⅝	½	3¼	2½	¼	2⅞	⅝
2¼	2	1	2⅛	2	⅞	3⅝	¾	⅞	⅝	½	3½	2¾	5/16	3⅛	¾
2½	2¼	1⅛	2½	2¼	1	4	⅞	⅞	¾	½	4	3	⅜	3½	⅞
2¾	2⅜	1¼	2¾	2½	1	4½	1	1	⅞	⅝	4½	3¼	7/16	3⅞	1
3	2⅝	1⅜	3	2¾	1¼	5	1⅛	1	1	⅝	5	4	½	4¼	1
3½	3	1½	3½	3	1¼	5⅝	1¼	1¼	1	⅝	5½	4½	½	4¾	1⅛
4	3½	1⅝	3¾	3¼	1½	6¼	1⅜	1¼	1⅛	¾	6¼	5	⅝	5½	1¼
4½	3¾	1¾	4	3½	1½	6⅞	1½	1½	1¼	¾	7	5½	⅝	6	1⅜
5	4	2	4½	4	1¾	7¾	1¾	1¾	1⅜	⅞	7¾	6	¾	6¾	1½
6	4½	2¼	5	4½	2	9	2	2	1½	⅞	9	7	¾	8	1⅝

REMARKS.—The dimensions given are for overhung crank pins or those that do not represent the continued diameter of crank shafts. For marine or other large bearings the dimensions follow the area of pistons, or the thrust. The dimension *B* is based upon crank pins of large diameter, as in the preceding table. The bearings should be of hard brass, whether lined or not. The caps of wrought iron. Bolts of soft steel or fibrous iron. The jam plates of steel, from one eighth inch to one quarter inch thick. The screws *K* to fit hard.

Solid Ends.—Connecting-rod ends cut out from solid forgings are coming more into use, especially high-speed engines of the smaller size, with overhung cranks. These joints are safer than those with loose straps, and may be lighter in weight. They are difficult to remove, however, unless the cross-head pin is taken out or a strap joint is employed at that end. Figure 64 shows an example of solid ends for connecting rods.

(CONTINUED.)

NOTES, MEMORANDA.

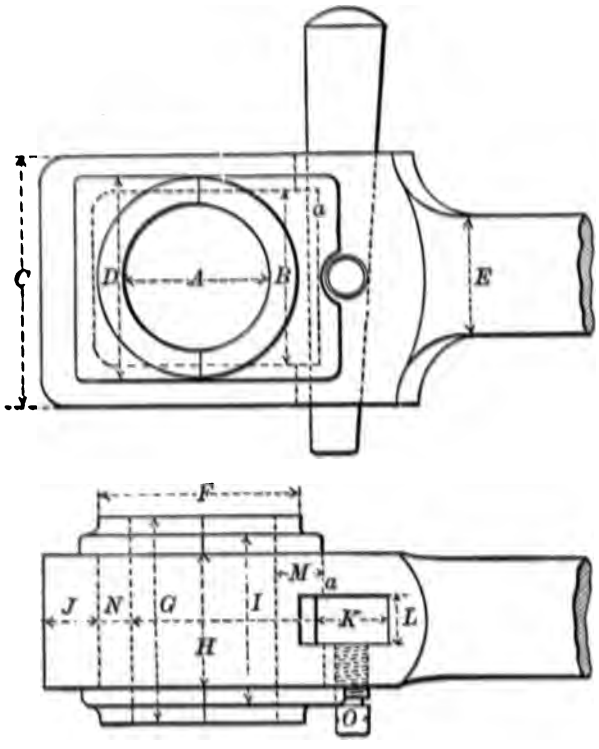

Fig. 64. SOLID END FOR CONNECTING RODS.

Dimensions in Inches.

A	B	C	D	E	F	G	H	I	J	K	L	M	N	O
1⅛	2	2⅞	2⅜	1¼	2¾	2	1¼	1⅝	⅝	⅝	⅝	½	⅝	⅝
1¾	2⅝	3⅝	2⅞	1⅛	2⅝	2¼	1⅜	2	⅝	¾	7/16	⅝	½	½
2	2¾	3¾	3¼	1¾	3	2½	1¾	2¼	¾	¾	½	⅝	⅝	½
2¼	3	4⅛	3⅝	2	3¼	2¾	2	2½	¾	⅞	9/16	¾	⅝	½
2½	3⅜	4⅝	4	2⅛	3¾	3	2¼	2⅞	⅞	⅞	⅝	¾	⅝	⅝
2¾	3⅝	5⅛	4¼	2¼	4	3⅜	2½	3⅛	1	1	11/16	⅞	¾	⅝
3	4	5½	4⅝	2½	4¼	3⅞	2¾	3½	1⅛	1⅛	¾	1	¾	⅝
3½	4½	6¼	5¼	3	4⅞	4¼	3¼	4	1¼	1¼	⅞	1	¾	⅝
4	5½	6⅞	5⅞	3⅜	5½	4¾	3¾	4½	1½	1½	1	1⅛	⅞	¾
5	6¼	8¼	7⅛	4	6½	6	4½	5½	1¾	1¾	1⅛	1¼	1	¾

Remarks.—The proportions are for best forged iron and hard brass. The weakest part is the dimension *C*, which can be increased in case of heavy duty. The taper of keys should be three quarters inch to one foot. They should be recessed at *a* from one eighth inch to one quarter inch. All flanges on the inner side except one on the end brass must be omitted, in order to insert the bearings.

NOTES, MEMORANDA.

Strap Ends.—In American practice strap ends are seldom made nowadays with gib and cotter, bolts and a key being preferred. The straps are commonly made of an uniform section, and when the reinforcement of two thirds the length and also at the end is considered, there seems no sufficient reason for reducing the section around the boxes. Figure 65 shows a common arrangement of these ends.

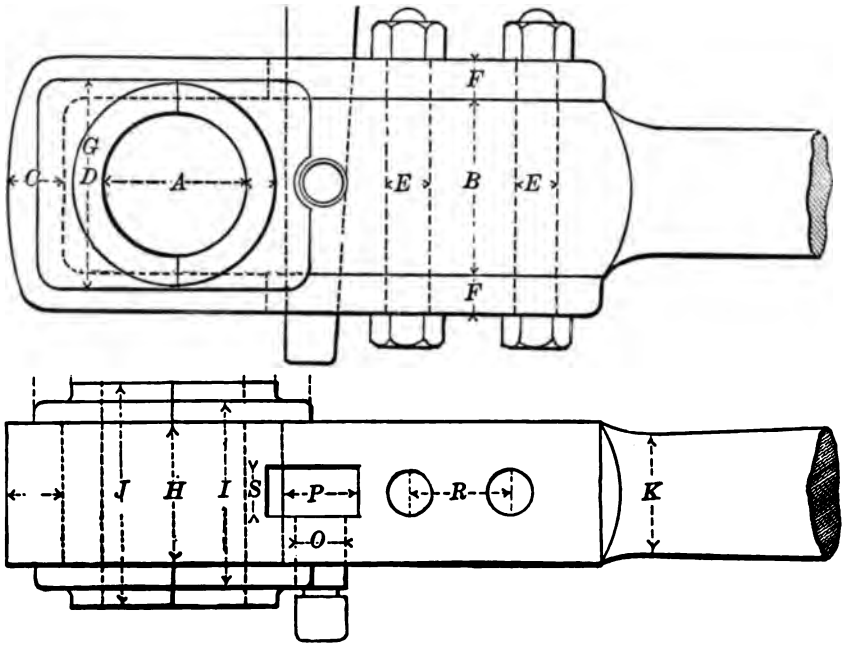

FIG. 65. STRAP END FOR CONNECTING RODS.

DIMENSIONS IN INCHES.

A	1½	1¾	2	2¼	2½	2¾	3	3½	4	5
B	1⅞	2¼	2½	2¾	3⅛	3⅜	3⅝	4¼	4⅞	6
C	½	⅝	¾	¾	⅞	1	1⅛	1¼	1½	1¾
D	⅜	⅜	½	½	½	⅝	⅝	⅞	⅞	1
E	½	½	⅝	¾	¾	⅞	1	1⅛	1¼	1⅜
F	7/16	½	9/16	⅝	11/16	¾	⅞	1	1⅛	1¼
G	2⅜	2¾	3⅛	3⅜	3⅞	4⅛	4⅜	5	5¾	7
H	1¼	1½	1¾	2	2¼	2½	2¾	3¼	3¾	4½
I	1⅝	2	2¼	2½	2⅞	3⅛	3½	4	4½	5½
J	2	2¼	2½	2¾	3	3⅜	3⅞	4¼	4¾	6
R	1¼	1¼	1½	1¾	1¾	2	2¼	2½	2¾	3

REMARKS.—The bearings of hard brass. Bolts fitted whole length. For any dimensions not given here refer to the preceding table.

NOTES, MEMORANDA.

Closed-Link Ends.—These, when constructed as below, are very suitable for small connecting rods and links. They are inexpensive to make, easy to adjust, and safe in use. The main rod can be forged or cast of malleable iron, steel, or bronze.

The construction shown in Figure 66 varies a good deal from common practice, especially in respect to the compensating screws *a* at the ends. These usually have no bearing area except the core of the screw, but, as shown in the drawing, these screws can be inserted from the inside, and have a broad surface where they bear on the brasses. Arranged in this manner connecting rods will stand as severe duty as those with straps or keys.

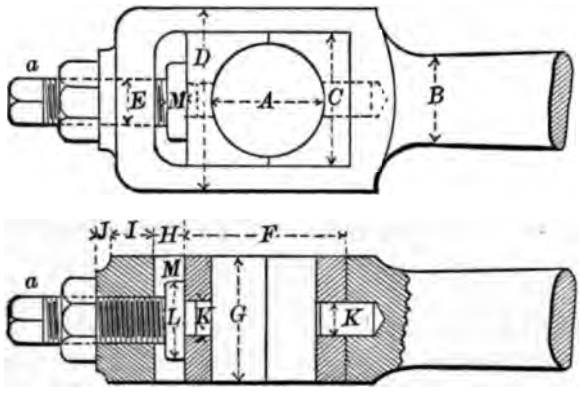

FIG. 66. CLOSED-LINK END.

DIMENSIONS IN INCHES.

A	B	C	D	E	F	G	H	I	J	K	L	M
3/4	11/16	1	1 1/2	3/8	1 1/4	7/8	1/4	3/8	1/8	1/4	1/2	1/8
7/8	3/4	1 1/8	1 5/8	3/8	1 1/2	1	1/4	3/8	1/8	1/4	5/8	1/8
1	7/8	1 1/4	1 3/4	1/2	1 5/8	1 1/8	3/8	1/2	3/16	5/16	5/8	3/16
1 1/8	1	1 1/2	2 1/8	1/2	1 7/8	1 1/4	3/8	1/2	3/16	5/16	3/4	3/16
1 1/4	1 1/8	1 5/8	2 1/4	5/8	2	1 3/8	7/16	5/8	1/4	3/8	7/8	1/4
1 1/2	1 3/8	1 7/8	2 5/8	5/8	2 3/8	1 3/4	7/16	5/8	1/4	3/8	1	1/4
1 3/4	1 1/2	2 1/4	3	3/4	2 3/4	2	1/2	3/4	3/8	7/16	1 1/8	5/16
2	1 3/4	2 1/2	3 3/8	7/8	3 1/8	2 1/4	1/2	7/8	3/8	1/2	1 1/4	5/16

REMARKS.—If the dimension *H* should come too close in construction the collar *L* can be recessed into *I*. The short dowel at the end of the screws *a* should not exceed *H* when added to *M*; otherwise, the brasses cannot be inserted. The dowel *K* can in some cases be omitted when convenience demands, but should be employed for safety in the case of high speed. The dimension *B* can be varied at pleasure..

NOTES, MEMORANDA.

Safety Connecting Rod.—Figure 67 shows a kind of connecting rod employed by the author for inclosed, or boxed-in, high-speed engines, but is applicable in any case where the outer strap can be passed over pins and shafts.

The main object of the arrangement is safety and convenient adjustment for the top pin.

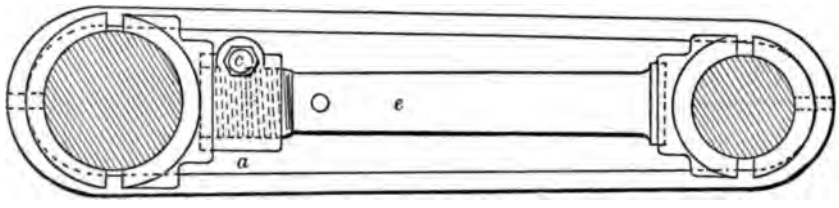

FIG. 67. PATENT SAFETY CONNECTING ROD.

Strut and strap connections of various kinds have been made, but always to fasten by either keys or jam nuts, neither of which can be relied upon for inclosed high-speed engines.

In the present case there is a split collar that nips the screw threads on the strut, so that all the threads have a full bearing. The clamping screw *e* is also nipped by the flexure of the split collar *a*.

As may be seen, the strut *e* has a large bearing area at each end which stiffens and supports the inner brasses. The straps are made of fibrous iron, shaped to a forming block, and are planed on the edges only. The performance of these connecting rods has been very satisfactory.

CHAPTER XI.

CROSS-HEADS AND GLANDS.

Cross-heads for engines are now made in a great variety of forms. The old jaw pattern which lasted for fifty years has been almost abandoned. They can be arranged in any manner that provides a sufficient amount of bearing area and balances the strain on the working surfaces. This last is an important matter, especially with short-stroke engines, and unless the angular strain of a connecting rod does not fall centrally on the jaws or cross-head bearings, there is a bending action on piston rods that soon fractures them. The diagram, Figure 68, illustrates the strain on cross-heads.

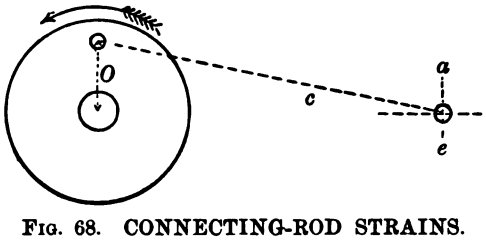

FIG. 68. CONNECTING-ROD STRAINS.
(CONTINUED.)

NOTES, MEMORANDA.

The strain on a cross-head from *a* to *e* is to the whole pressure on the piston as the angle of *c* is to ninety degrees, and is upward or downward, as the direction in which an engine runs. Moving as indicated by the arrow, the strain on a cross-head is downward, from *a* to *e*. If the engine is reversed this strain is changed from *e* to *a*, and alternating in extent with the weight of the cross-head and connections causes knocking. The shaft of a horizontal engine should, whenever possible, run in the direction indicated.

Slipper Cross-Heads.—Cross-heads of this kind are employed for what are called flat frames and single-leg vertical frames. They are accessible and convenient, with large bearing surfaces favorably disposed for lubrication. Figure 69 shows a common construction of cast-iron cross-heads of this kind.

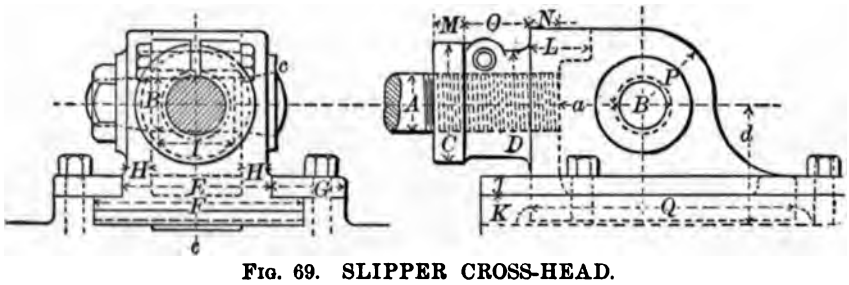

FIG. 69. SLIPPER CROSS-HEAD.

DIMENSIONS IN INCHES.

A	B	C	D	E	F	G	H	I	J	K	L	M	N	O	P	Q
1¼	1⅛	2½	2¼	3½	5	1⅝	⅝	1½	½	¾	1	½	⅝	1⅜	1½	5
1½	1⅜	3	2⅝	4¼	6	1¾	¾	2	9/16	¾	1⅜	⅝	¾	1⅝	1⅞	6
1¾	1⅝	3½	3⅛	4¾	6½	2	⅞	2¼	⅝	⅞	1½	⅞	⅞	1¾	2⅛	7
2	1⅞	4	3⅝	5½	7½	2¼	1	2½	¾	1	1¾	1	1	2	2½	8
2¼	2⅛	4½	4	6	8¼	2½	1⅛	2¾	⅞	1⅛	2	1⅛	1⅛	2¼	2¾	9
2½	2⅜	5	4½	6½	9	2¾	1¼	3	1	1¼	2¼	1¼	1¼	2½	3	10
2¾	2⅝	5½	5	7	9¾	3	1⅜	3⅜	1½	1⅜	2½	1⅜	1⅜	2¾	3½	11
3	2¾	6	5⅜	8	11	3¼	1½	3⅞	1¼	1½	3	1½	1½	3	4	12
3½	3¼	7	6⅜	9	12½	4	1¾	4¼	1⅜	1¾	3½	1¾	2	3¼	4½	13
4	3¾	8	7¼	10	14	4¼	2	4¾	1½	2	4	2	2¼	3¾	5	14

REMARKS.—The distance *a* must be wide enough to clear the ends of connecting rods. The taper on the ends of the pins *c* can be one inch to a foot. The clearance space at *e* can be one third of the whole width, and deep enough behind the cross-head to clear the connecting rod. The dimension *d* should not exceed two and a half times *A*.

NOTES, MEMORANDA.

Box Cross-Heads.—These cross-heads were a necessity arising out of the open-side engine frames of the Corliss type. They have no advantages over other methods, and are open to objection in respect to first cost, inconvenience of adjustment, and the necessity of placing the adjusting keys of connecting rods across their thin section.

For vertical engines, especially of the marine type, where frames are open at both sides, cross-heads of this type are not only suitable, but best. There is, however, a tendency in modern practice to a single column and strut in front, in which case the slipper cross-head is used. Figure 70 shows an example of cast-iron box cross-heads.

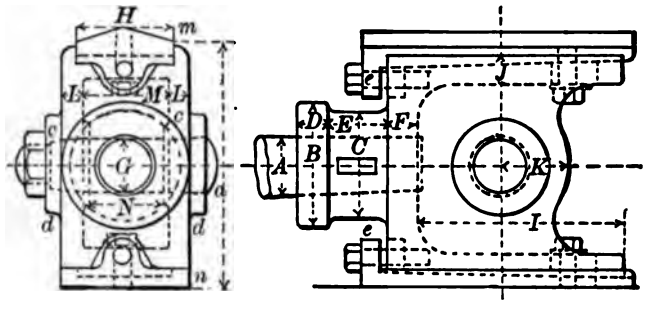

FIG. 70. BOX CROSS-HEAD.

DIMENSIONS IN INCHES.

A	B	C	D	E	F	G	H	I	J	K	L	M	N
1½	3	2¾	¾	1½	¾	1⅜	3	5	¾	1¾	⅝	2¼	2
1¾	3½	3⅛	⅞	1¾	⅞	1⅝	3¼	6	⅞	2	⅝	2½	2¼
2	4	3⅝	1	2	1	1⅞	3⅝	7	1	2¼	¾	2⅝	2½
2¼	4½	4	1⅛	2¼	1⅛	2⅛	4¼	8	1	2½	⅞	3⅛	2¾
2½	5	4½	1¼	2½	1¼	2⅜	4½	9	1⅛	2¾	⅞	3⅜	3
2¾	5½	5	1⅜	2¾	1⅜	2⅝	5⅛	10	1¼	3¼	1	3¾	3⅜
3	6	5½	1½	3	1½	2⅞	6	11	1⅜	3¾	1⅛	4⅜	3⅞
3½	7	6¼	1¾	3½	1¾	3¼	6¾	12	1½	4¼	1⅜	4¾	4¼
4	8	7¼	2	4	2	3¾	7¾	14	1¾	4¾	1⅝	5½	4¾

REMARKS.—The distance *a* is a resultant of the length of the connecting rod. The taper at *c* one inch to a foot. The shoes should be slotted at *e* to allow some vertical play on the screws. The taper on the inner face of the shoes, one half inch to a foot. The bosses *d* should be deep enough to give a bearing three fourths the diameter of the pin, in length, at each side. The dimension *K* is usually shortened to a limit of safety, so as to clear the cross keys in connecting rods. The shoes can be angular, as at *m*, flat, as at *n*, or an arc of a circle on the faces. The latter is not recommended.

NOTES, MEMORANDA.

Bar Cross-Heads.—Figure 71 shows a kind of cross-head used on cargo and other winding engines, that seems to have some claims for high speed not apparent in the mechanism. The square guide bars of wrought iron are strong, light, and afford large wearing surfaces.

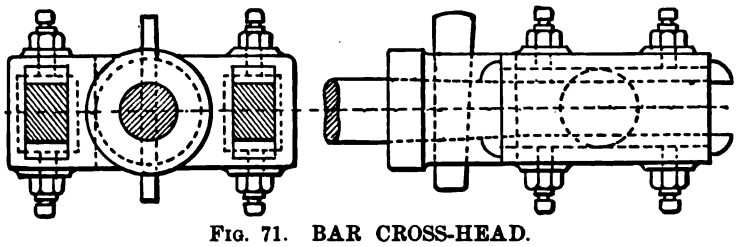

FIG. 71. BAR CROSS-HEAD.

These cross-heads are not used extensively enough to call for dimensions here.

Packing Glands.—Figure 72 is an example of common packing glands for piston and valve rods. The gland itself is commonly made too long. One half the depth of the stuffing box is enough. Beveled ends for glands and junk rings are not necessary.

DIMENSIONS IN INCHES.

A	B	C	D	E	F	G	H
1	1¼	1¾	⅝	1⅛	7/16	2	½
1¼	1½	2	⅝	2	½	2⅝	½
1½	1¾	2½	½	2¼	9/16	3	⅝
1¾	2	2¾	½	2½	⅝	3¼	⅝
2	2¼	3	⅝	2¾	11/16	3½	¾
2¼	2⅝	3¼	⅝	3	¾	4	¾
2½	2½	3¾	¾	3¼	13/16	4½	⅞
2¾	2¾	4	¾	3½	⅞	4¾	⅞
3	3	4½	⅞	4	1	5¼	1⅛
3½	3½	5	⅞	4½	1⅛	6	1⅛
4	4	5½	1	5	1¼	6½	1⅜

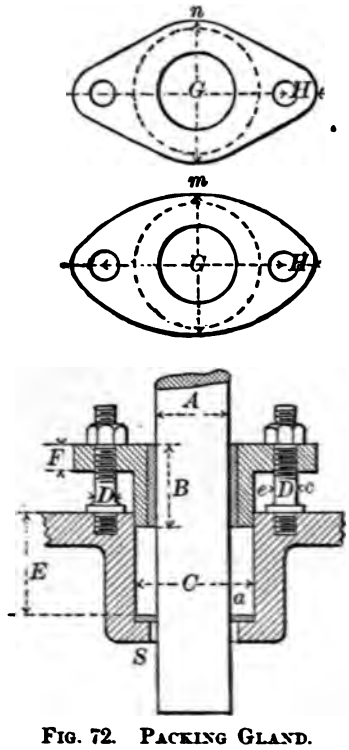

FIG. 72. PACKING GLAND.

REMARKS.—The dimension *E* can be from one to one and a half times *A*. The dimension *F* is less than common practice, but is enough for all the strain a gland should bear. The studs *D*, to look well, should have collars. Very little clearance at *e* will answer one diameter of the stud is ample. Flanges can be round or as shown at *m* or *n*, but never with concave lines at the sides. Lining of brass or other soft metal to prevent corrosion and abrasion is desirable.

NOTES, MEMORANDA.

CHAPTER XII.

STEAM BOILERS.

General Remarks.—The improvements in steam boilers during fifty years past bear scant proportion to the efforts made to produce them. The processes of manufacture, both of boilers and their materials, have been all that can be desired, but the evaporative efficiency of boilers remains nearly the same it was eighty years ago.

At the Centennial Exhibition at Philadelphia in 1876 the highest efficiency was attained by boilers bearing the nearest analogy to old types. The same remark applies to modern marine boilers. They are in their principal features the same as old types of internally-fired boilers.

The principal efforts at boiler improvement seem to have been directed to rapid evaporation and reducing cubic capacity, or first cost. The maze of modification that exists has generally one of these objects, neither of which is consistent with true economy.

The manufacture of horizontal internally-fired flue boilers, with their "cubic yard of capacity" for each horse-power, now gives some promise of success in American practice, and there is likelihood of its prevailing in future in this country as it does in Europe.

There is one principle affecting all boiler arrangement. The gases of combustion tend upward, so does steam, and to produce the best effect the course of the steam and the gases must cross each other. The gases of combustion are the easiest to lead horizontally, and this calls for horizontal flues.

Another principle is that the stratum of water should be thin in the direction of the steam's escape; in other words, boilers should be horizontal, and have a large area of water surface to permit the escape of steam without carrying water with it. The saturation of steam is generally caused by a want of surface and the depth of water through which the steam must rise.

It is only in case of cramped room and when weight is a primary objection that thin tubes and rapid evaporation are expedient, for marine uses and locomotives, for example; but for stationary purposes, large cubic capacity, internal firing, and slow evaporation are the characteristics of true economy, for both fuel and maintenance.

Strength of Boiler Shells.—In computing the strength of boiler shells it is common to employ a factor of safety from 5 to 6; that is, to estimate the working pressure at one fifth to one sixth the ultimate strength, or what will rupture the plates.

To ascertain the pressure a boiler shell will sustain with safety, the factor of safety being 6:

RULE FOR PRESSURE.—Multiply the thickness of the plate in inches by one sixth of the tensile strength of the metal and divide by one half the inside diameter in inches.

RULE FOR THICKNESS.—Multiply the pressure in pounds per square inch by one half the diameter of the shell and divide by one sixth the tensile strength of the metal.

NOTES, MEMORANDA.

Tensile Strength of Plates.—Some of the commercial brands are as follows, with the tensile strength, or number of pounds a section of one square inch will sustain.

CH No. 1	C No. 1 S	CH No. 1 F	Steel Plates
40,000 lbs.	50 to 55,000 lbs.	50 to 60,000 lbs.	50 to 80,000 lbs.

Ultimate Strength of Shells (*Molesworth*).—Estimating the tensile strength of plates at 43,000 pounds. The body of the table gives pressure in pounds per square inch that will rupture the plates.

Single-Riveted Joints.						Double-Riveted Joints.					
Diameter of Shells in Inches.	Thickness in Inches.					Diameter of Shells in Inches.	Thickness in Inches.				
	1/4	5/16	3/8	1/2	5/8		1/4	5/16	3/8	1/2	5/8
24	501	626	752	1003	1254	24	627	784	940	1254	1568
30	401	501	602	801	1005	30	502	627	752	1005	1254
36	334	417	501	669	836	36	418	522	627	836	1045
42	286	358	430	573	716	42	358	447	537	716	896
48	255	306	376	501	627	48	313	391	470	627	783
60	202	252	303	401	500	60	251	314	376	500	627
72	167	209	250	334	418	72	209	261	313	418	522

Remarks.—To find the working pressure from the above table, divide the quantities given by the factor of safety assumed and the quotient will be the required pressure.

Standard Dimensions.—The following table gives the pressure permitted by law in the United States for boiler shells of various diameters and thicknesses, when the plates have a tensile strength of 50,000 pounds for each square inch of section. The body of the table gives pounds of pressure for each square inch for single riveting. Double riveting, twenty per cent. more.

Thickness of Shells in Inches.	Diameters of Shells in Inches.											
	36	38	40	42	44	46	48	54	60	66	72	78
1/4	116	110	104	99	95	91	87	77	69	63	58	53
5/16	145	137	130	124	118	113	109	96	87	79	72	67
3/8	174	165	156	149	142	136	130	116	104	95	87	80
1/2	232	220	208	198	190	182	174	154	138	126	116	106

NOTES. MEMORANDA.

Boiler Proportions.—The following simple formulæ cover all the principal quantities in arranging steam boilers:

$$P = \frac{ST}{8D} \qquad D = \frac{ST}{8P} \qquad T = \frac{8DP}{S} \qquad S = \frac{8DP}{T}$$

P = Pressure of steam in pounds per inch. T = Thickness of plates in inches.
D = Diameter of boiler in inches. S = Tensile strength in pounds.

Notes Respecting Boilers.—The weight of common stationary boilers can be approximately found by allowing 150 pounds for each indicated horse-power.

The power of boilers is estimated from the heated surface, or the area exposed to the fire, allowing 10 to 15 square feet for each horse-power.

The steam pressure per inch multiplied by the diameter of a boiler in inches gives the transverse strain on the main shell.

The Size of Rivets.—The section of rivets should be equal to that of one plate between the rivet holes. For example, plates one quarter inch thick and holes two inches apart, the section of rivets should have an area of one half inch.

Multitubular Boilers.—Horizontal boilers of this kind, when the water is not too impure, give a high efficiency, are cheap in first cost, and inexpensive to set. The following table gives a set of proportions for horizontal tubular boilers; also, the common horse-power rating.

PROPORTIONS FOR MULTITUBULAR BOILERS.

Horse-Power of Boilers.	Diam. of Boilers in Inches.	Length of Boilers in Feet.	Thickness of Shell in Inches.	Thickness of Heads in Inches.	Number of Tubes.	Diam. of Tubes in Inches.	Diam. of Chimneys in Inches.	Estimated Weight of Boilers in Pounds.	Weight of Boilers and Fittings in Pounds.	Heating Surface in Feet.
8	30	8	1/4	3/8	18	2 1/2	14	1,500	3,000	125
21	36	12	1/4	3/8	26	3	18	2,600	4,000	324
27	40	12	1/4	3/8	34	3	20	3,500	5,500	405
33	42	14	5/16	3/8	36	3	21	4,650	6,500	497
35	44	14	5/16	3/8	40	3	22	4,900	8,500	524
40	48	16	5/16	7/16	34	3 1/2	24	6,300	8,700	603
43	50	16	5/16	7/16	36	3 1/2	24	6,500	10,500	636
47	52	16	5/16	7/16	40	3 1/2	25	7,000	11,200	699
51	54	16	5/16	7/16	44	3 1/2	26	7,500	12,000	761
64	60	16	3/8	7/16	57	4	30	10,000	16,000	964

REMARKS.—The table is based on practice in San Francisco. For low-grade fuel larger tubes are preferable. The horse-power given is maximum; ten to twenty per cent. more heating surface is preferable.

NOTES, MEMORANDA.

Vertical Tubular Boilers.—Small sizes of these boilers are used for convenience and portability. They are usually mounted on a cast-iron base frame, containing an ash box. The following table gives average proportions for small sizes:

VERTICAL TUBULAR BOILERS.

Horse-Power.	Diameter in Inches.	Height in Inches.	Number of Tubes.	Diameter of Tubes in Inches.	Length of Tubes in Inches.	Thickness of Shell in Inches.	Thickness of Heads.
3	22	50	24	2	26	1/4	3/8
3½	24	50	28	2	26	1/4	3/8
4	24	62	28	2	36	1/4	3/8
5	27	62	34	2	36	1/4	3/8
6	30	62	40	2	36	1/4	3/8
8	32	74	50	2	48	1/4	3/8
10	36	74	64	2	48	1/4	3/8
15	42	86	90	2	60	5/16	3/8
20	48	98	120	2	70	5/16	3/8

Cornish and Lancashire Boilers.—Boilers of this type are the most economical for all stationary purposes. They are more expensive than other kinds in first cost, because of greater cubic capacity and slower combustion; the Cornish kind having one and the Lancashire two flues. Figure 73 is a diagram of a Cornish boiler, showing the manner of setting.

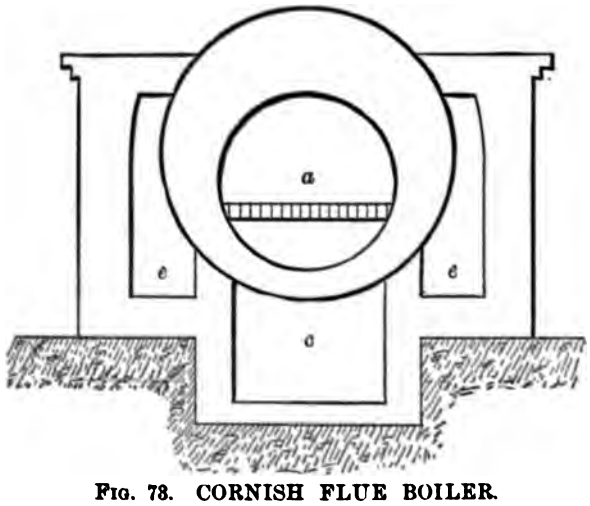

FIG. 73. CORNISH FLUE BOILER.

The heat traverses the length of the boiler three times: first passing back through the flue *a*, returning in the side flues *e*, *e*, on the outside, then back again to a chimney in the flue *c*.

NOTES, MEMORANDA.

PROPORTIONS FOR CORNISH AND LANCASHIRE BOILERS.

Horse-Power.	Diam. of Shell in Inches.	Diam. of Flue in Inches.	Length of Boiler in Feet.	Weight of Boiler in Pounds.	Horse-Power.	Diam. of Shell in Inches.	Diam. of Flue in Inches.	Length of Boiler in Feet.	Weight of Boiler in Pounds
20	36	22	16	4,500	60	62	25	28	16,500
40	52	30	22	12.000	80	72	28	33	24,500
60	62	36	28	21,000	100	80	32	37	32,750
80	72	42	32	32,000	120	88	34	42	42,000
100	80	48	36	44,000					
120	88	52	40	57.500					

NOTE.—The weights are of course contingent on the steam pressure and the thickness of the plates. Those given are average, and suitable for a pressure of 75 pounds per inch.

BOILER FLUES AND TUBES.

The distinction between flues and tubes is that the former are supposed to convey the gases of combustion and tubes to contain water. The names are applied both ways, however.

Heating Surface of Flues.—The surface of flues or tubes in square feet can be found by multiplying their length in feet by the quantities in the lower line of the following table, the diameter being taken inside or outside, as the case may be. The decimals represent the area in square feet of one foot in length.

Diameter of Tubes in Inches . . .	1½	2	2½	3	3½	4	5	6
Area of 1 Foot in Length	.392	.523	.654	.785	.916	1.04	1.30	1.57

NOTES ON FURNACES.—The rate of combustion is so much varied that it is difficult to apply rules of any kind to flues or other details of steam furnaces. The amount of coal burned on each square foot of grates varies from four to forty pounds per hour.

The area of grate surface in common brick-work furnaces should be one square foot for two horse-power.

For coal the area of chimney flues should be from one eighth to one twelfth the area of the grate surface.

The area of flues for wood fuel should be fifty per cent. more than for coal.

The base of chimneys should be not less than one tenth of the height and the taper one inch in three feet.

Chimneys forty inches or less in diameter may finish with a single course of nine inches at the top. For larger chimneys thirteen inches is thin enough at the top.

The height of chimneys should depend mainly on the temperature of the gases when they enter the flue. The lower the temperature the higher a chimney should be.

The draught of a good chimney should be three eighths to one half inch of water pressure. Tapering the flues has no effect worth considering.

For stationary boilers the area of air inlets should not be less than one eighth of the area of the grates.

NOTES, MEMORANDA.

SECTION FOURTH.

CHAPTER XIII.

HYDRAULICS.

General Remarks.—The raising and conveyance of water and its application for motive power occupies a prominent place in modern engineering work, deserving in most cases, where a large amount of water is to be dealt with constantly, a careful application of rules and ascertained data.

In common shop practice and in the construction of temporary apparatus a nice observance of such rules is not required. Commercial considerations, such as cost and convenience, may outweigh a difference in useful effect, but whenever power has value it is best to conform as nearly as possible to authorities laid down by experiment.

The following are some of the observed facts respecting the movement of fluids:

The discharge through apertures under a given head is nearly as their area.

The amount discharged in a given time is as the square root of the head.

The discharge through a cylindrical, horizontal nipple is increased by adding to its length up to form diameters.

The discharge of fluids is inversely as the square root of their density or weight.

The discharge in vertical pipes increases with their length because of accelerated velocity.

Useful Memoranda.—A cubic foot of water weighs 62.5 pounds and contains 7.48 gallons, commonly reckoned 7.5 gallons.

An American standard gallon contains 231 cubic inches and weighs 8.33 pounds.

The pressure of water equals .434 pounds to the square inch, or 62.5 pounds to the square foot for each foot of head.

The velocity of spouting water is in feet per second eight times the square root of the head in feet.

(CONTINUED.)

NOTES. MEMORANDA.

The force of issuing water is, theoretically, equal to its gravity. In practice there is sometimes attained by water wheels ninety per cent. of this effect.

The contents of pipes or cylindrical vessels are found by multiplying the length in feet by the area in inches and dividing by 19.25 for gallons.

A short rule for the contents of pipes is to divide the square of the diameter in inches by 25. This gives gallons per foot of length, approximately.

Water is less compressible than the hardest metals, solidifies at + 32 degrees, and evaporates under atmospheric pressure at + 212 degrees.

A rough rule for ascertaining the gross amount of power required to raise water with common pumps is to multiply the number of gallons by the height in feet and divide by 2500.

Power required to raise Water.—Power when applied to raising water is subject to various kinds of loss, depending on the perfection of the apparatus employed. Pumping machinery of the common kind seldom attains an efficiency of more than sixty-six per cent.

The following table gives, within one per cent., the theoretical amount of power required for quantities and heads met with in common practice.

TABLE OF HORSE-POWER.

Gallons raised per Minute.	Height raised in Feet.									
	10	20	30	40	50	60	70	80	90	100
200	0.50	1.00	1.50	2.00	2.50	3.00	3.50	4.00	4.50	5.00
300	0.75	1.50	2.25	3.00	3.75	4.50	5.25	6.00	6.75	7.50
500	1.25	2.50	3.75	5.00	6.25	7.50	8.75	10.00	11.25	12.50
750	1.87	3.75	5.62	7.50	9.37	11.25	13.12	15.00	16.87	18.75
1,000	2.50	5.00	7.50	10.00	12.50	15.00	17.50	20.00	22.50	25.00
1,500	3.75	7.50	11.25	15.00	18.75	22.50	26.25	30.00	33.75	37.50
2,000	5.00	10.00	15.00	20.00	25.00	30.00	35.00	40.00	45.00	50.00
3,000	7.50	15.00	22.50	30.00	37.50	45.00	52.50	60.00	67.50	75.00
5,000	12.50	25.00	37.50	50.00	62.50	75.00	87.50	100.00	112.50	125.00
7,500	18.75	37.50	56.25	75.00	93.75	112.50	131.25	150.00	168.70	187.50
10,000	25.00	50.00	75.00	100.00	125.00	150.00	175.00	200.00	225.00	250.00
15,000	37.00	75.00	112.50	150.00	187.50	225.00	262.50	300.00	337.50	375.00
20,000	50.00	100.00	150.00	200.00	250.00	300.00	350.00	400.00	450.00	500.00

Remarks.—The actual amount of power consumed is commonly one third more than above. In selecting engines to operate pumps the rated horse-power should be double what is named in the table. In selecting boilers to supply steam for common direct-acting steam pumps the rated horse-power should be two and a half times the amount named in the table.

NOTES, MEMORANDA.

Measuring Water.—Whenever the volume of water is not too great, the best method of measuring it is to note the time of filling a vessel of known size, and then compute for minutes, hours, or days.

This is applicable to spring supplies and small streams where the quantity of water does not exceed 16 cubic feet, or 120 gallons a minute. This much can be caught in a box or vessel small enough to be easily decanted with the supply of thirty to sixty seconds' time.

For larger amounts, the usual method is to compute the flow through a rectangular notch, called Wier measurement. The formula for volume is somewhat complicated, but there are tables prepared so that no calculation is required. The notch where the water pours over the wier board should be some multiple of a foot in length, and the edges up stream should be made thin. The overfall should be free, at least twice as much as the depth on the wier.

There should, when possible, be a considerable pond above the dam to destroy the velocity of the approaching water, otherwise an uncertain factor is introduced.

The depth is not measured on the dam, but from the top of a stake which can be driven in the pond above, so its top will be level with the top of the wier. The water itself, as it rises, gives this level.

The following table for rectangular notches gives the amount in cubic feet per minute for each foot of width and for depths as noted. For gallons multiply by 7.5.

CUBIC FEET PER MINUTE FOR EACH FOOT OF WIDTH.

Depth in Inches.	0	⅛	¼	⅜	½	⅝	¾	⅞	0	Depth in Inches.
0	0	.12	.60	1.08	1.68	2.40	3.12	3.96	0	0
1	4.80	5.64	6.60	7.80	8.88	9.96	11.16	12.36	4.80	1
2	13.68	14.88	16.32	17.64	19.08	20.52	21.96	22.80	13.68	2
3	25.08	27.96	28.32	30.00	31.56	33.36	34.04	36.84	25.08	3
4	38.64	40.44	42.24	44.16	45.96	47.88	49.92	51.84	38.64	4
5	54.00	56.04	58.08	60.12	62.16	64.32	66.48	68.64	54.00	5
6	70.80	73.08	75.36	77.64	79.80	82.20	84.60	87.00	70.80	6
7	89.28	91.68	94.08	96.60	99.00	101.0	103.9	106.3	89.28	7
8	109.2	111.7	114.2	116.8	119.5	122.1	124.8	127.4	109.2	8
9	130.3	132.9	135.7	138.4	140.8	144.0	146.7	149.6	130.3	9
10	152.5	155.4	158.2	161.1	164.0	166.1	169.9	173.0	152.5	10
11	176.0	179.0	182.1	185.1	188.0	191.5	194.4	197.5	176.0	11
12	200.7	203.8	207.1	210.2	213.3	216.6	219.8	222.9	200.7	12

NOTES, MEMORANDA.

Miners' Inches of Water.—This is a measure for water employed on the Pacific Coast of the United States, and is convenient in the case of small amounts, because the element of time is not included. The miners' inch is based on the water that will flow through an aperture under a specified head, but, as neither the head nor the kind of apertures are determined or uniform, the quantity varies from ten to twelve gallons per minute.

In selling small amounts of water the system has the important advantage of being understood by the purchaser, and is capable of test at any time without computation, when the quantities are previously agreed upon.

THE CONDUCTING CAPACITY OF PIPES.

The amount of water conveyed by pipes is an extremely complicated problem, even without considering the character of the pipes as to smoothness and bends.

There are four variable elements to be dealt with,—namely, the head, or pressure; the length, or friction; the volume, or diameter, and bends.

The head, fall, or pressure is easily disposed of, the flow from this cause being, when unimpeded, as the square root of the height. The volume, or flow, is most complex of all, being as the square root of the fifth power of the pipe's diameter. The friction is almost equally complex, being as the fifth power of the pipe's diameter, or bore. The resistance of bends is as their radius, the angle made, and the velocity of the water.

The following are some of the best known formulæ for determining pipe capacity.

NOTATION.

D = Diameter of pipes in feet. H = Head of water in feet.
d = Diameter of pipes in inches. L = Length of pipes in feet.
W = Cubic feet discharged per minute. A = Length of pipes in yards.
G = Gallons discharged per minute.

FORMULÆ.

Nystrom.

$$W = 235 \sqrt{\frac{H\,D^5}{L + 50\,D}}$$

Etelwein.

$$W = 4.71 \sqrt{\frac{H\,d^5}{L}}$$

Hawksley.

$$G = \sqrt{\frac{(15\,D)^5\,H}{A}}$$

Resolved into arithmetical rules these methods will be as follows:

NYSTROM'S FORMULA. *Rule.*—Multiply the head in feet by the fifth power of the pipe's diameter in feet and divide by the length of the pipe in feet plus fifty times its diameter, then extract the square root of the quotient and multiply by 235. The product will be the number of cubic feet discharged in one minute. (W)

ETELWEIN'S FORMULA. *Rule.*—Multiply the head in feet by the fifth power of the pipe's diameter in inches and divide the product by the length of the pipe in feet. Extract the square root of the quotient and multiply by 4.71. This will also give cubic feet per minute. (W)

HAWKSLEY'S FORMULA. *Rule.*—Multiply the head in feet by the fifth power of fifteen times the pipe's diameter in inches. Divide the product by the length of the pipe in yards and extract the square root. This gives gallons discharged per hour. (G)

(CONTINUED.)

NOTES MEMORANDUM

Capacity of Small Pipes.—The first table gives eighty-five per cent. of the theoretical number of gallons per minute conveyed by small pipes with a fall of from one to ten feet in each one hundred feet of length.

Diameter of Pipes in Inches.	Rate of Fall, or Head, in Feet for each 100 Feet of Length.									
	1	2	3	4	5	6	7	8	9	10
⅝	.22	.33	.42	.50	.56	.62	.68	.73	.79	.83
½	.46	.70	.88	1.04	1.18	1.31	1.42	1.53	1.64	1.36
¾	1.33	1.98	2.50	2.94	3.33	3.68	4.01	4.32	4.60	4.89
1	2.79	4.15	5.22	6.13	6.94	7.68	8.34	9.00	9.60	10.17
1¼	4.96	7.36	9.24	10.85	12.27	13.59	14.77	15.89	16.94	17.95
1½	7.93	11.75	14.73	17.28	19.57	21.60	23.50	25.27	26.95	28.54
2	16.61	24.53	30.72	35.99	40.67	44.93	48.87	52.54	56.01	59.29
2½	29.45	43.39	54.35	63.55	71.79	79.27	86.18	92.64	98.73	104.5
3	46.99	69.11	86.39	101.1	114.1	126.0	137.7	147.2	156.8	165.9

The following table gives eighty-five per cent. of the theoretical number of gallons per minute discharged by small pipes with a fall of from two feet in ten to vertical.

Head, or Fall.	Bore of Pipes in Inches.								
	⅝	½	¾	1	1¼	1½	2	2½	3
2 in 10	1.22	2.54	7.13	14.8	26.1	41.5	86.0	151.5	239.9
3 in 10	1.52	3.17	8.89	18.4	32.4	51.5	106.6	188.4	298.2
4 in 10	1.78	3.71	10.3	21.5	37.8	59.9	124.5	219.0	347.3
5 in 10	2.01	4.18	11.6	24.2	42.6	67.7	140.1	246.4	390.7
6 in 10	2.22	4.61	12.8	26.6	47.0	74.5	154.3	271.3	430.1
7 in 10	2.41	5.01	14.0	29.0	51.0	80.9	167.4	294.2	466.4
8 in 10	2.59	5.38	15.0	31.1	54.77	86.8	179.6	315.7	500.2
9 in 10	2.76	5.73	15.9	33.1	58.2	92.4	191.1	335.8	532.1
Vertical	2.92	6.06	16.9	35.0	61.6	97.6	202.0	354.9	562.2

Remarks.—Vertical pipes when of considerable length will discharge more than the quantities named.

NOTES, MEMORANDA.

TABLE SHOWING AMOUNT DISCHARGED BY PIPES FROM 4 TO 36 INCHES IN BORE.

The first lines are cubic feet per minute. Second lines the fall in feet per 100 feet of length.

Diam. of Pipes, Inches.	Velocity of Water through Pipes in Feet per Second.											Diam. of Pipes, Inches.
	2.0	2.5	3.0	3.5	4.0	4.5	5.0	5.5	6.0	6.5	7.0	
4	10.5	13.0	15.7	18.3	21.0	23.5	26.0	28.7	31.4	34.0	36.6	4
	0.63	1.0	1.4	1.9	2.5	3.2	4.0	4.8	5.67	6.66	7.72	
5	16.4	20.4	24.5	28.6	32.7	36.7	41.0	44.8	49.0	53.0	57.2	5
	0.47	0.73	1.05	1.4	1.9	2.4	2.9	3.5	4.2	4.93	5.72	
6	23.6	29.3	35.2	41.2	47.0	53.0	59.0	64.5	70.5	76.5	82.5	6
	0.37	0.57	0.82	1.13	1.5	1.8	2.3	2.8	3.3	3.87	4.49	
7	32.0	40.0	48.0	56.0	64.0	72.0	80.0	88.0	96.0	104.0	112.0	7
	0.3	0.47	0.67	0.92	1.2	1.5	1.9	2.2	2.7	3.16	3.66	
8	42.0	52.0	63.0	73.0	84.0	94.0	104.0	115.0	125.0	136.0	146.0	8
	0.25	0.39	0.56	0.77	1.0	1.3	1.6	1.9	2.2	2.64	3.07	
9	53.0	66.0	79.0	93.0	106.0	119.0	133.0	145.0	159.0	172.0	185.0	9
	0.215	0.335	0.48	0.66	0.86	1.08	1.3	1.6	1.9	2.26	2.64	
10	65.0	82.0	98.0	115.0	131.0	147.0	164.0	180.0	196.0	212.0	229.0	10
	0.19	0.29	0.42	0.57	0.75	0.95	1.2	1.4	1.68	1.97	2.29	
12	94.0	117.0	141.0	165.0	188.0	212.0	235.0	258.0	283.0	306.0	330.0	12
	0.15	0.23	0.33	0.45	0.59	0.75	0.90	1.12	1.33	1.56	1.85	
14	128.0	160.0	192.0	224.0	257.0	288.0	320.0	352.0	384.0	416.0	450.0	14
	0.12	0.19	0.28	0.37	0.49	0.61	0.76	0.92	1.1	1.28	1.49	
16	168.0	209.0	250.0	293.0	335.0	376.0	418.0	460.0	502.0	542.0	585.0	16
	0.10	0.16	0.23	0.31	0.41	0.52	0.64	0.77	0.92	1.08	1.25	
18	212.0	264.0	317.0	372.0	425.0	475.0	530.0	580.0	635.0	687.0	742.0	18
	0.09	0.14	0.20	0.27	0.35	0.44	0.55	0.67	0.79	0.93	1.08	
21	288.0	360.0	430.0	505.0	575.0	650.0	720.0	790.0	865.0	935.0	1010.0	21
	0.07	0.11	0.16	0.22	0.29	0.37	0.455	0.55	0.67	0.669	0.86	
24	377.0	470.0	565.0	660.0	755.0	845.0	940.0	1030.0	1130.0	1220.0	1320.0	24
	0.06	0.096	0.14	0.19	0.25	0.31	0.38	0.46	0.55	0.648	0.76	
30	590.0	730.0	880.0	1030.0	1180.0	1320.0	1470.0	1610.0	1760.0	1910.0	2060.0	30
	0.045	0.037	0.105	0.14	0.19	0.24	0.29	0.34	0.42	0.481	0.57	
36	850.0	1000.0	1270.0	1480.0	1700.0	1900.0	2120.0	2330.0	2540.0	2750.0	2970.0	36
	0.037	0.058	0.084	0.12	0.15	0.19	0.23	0.28	0.34	0.393	0.46	

NOTES, MEMORANDA.

Loss of Head by Bends.—From the quantities given in the preceding tables there must be deducted the loss of head or diminished velocity caused by bends. The following table shows the loss in feet of head for bends of two radii and various lengths from 30 to 180 degrees. Longer radii are preferable, especially in the case of high velocity.

LOSS OF HEAD IN FEET BY CIRCULAR BENDS.

Velocity in Feet per Second.	Diameter, 2; Radius, 5.					Diameter, 4; Radius, 5.				
	30° Head.	60° Head.	90° Head.	120° Head.	180° Head.	30° Head.	60° Head.	90° Head.	120° Head.	180° Head.
2.	.0014	.0029	.0043	.0058	.0086	.0021	.004	.006	.008	.013
3.	.0032	.0064	.0096	.0128	.0192	.0048	.010	.014	.020	.029
4.	.0057	.0114	.0171	.0228	.0342	.0085	.017	.025	.034	.051
5.	.0089	.0179	.0268	.0358	.0536	.0133	.027	.040	.054	.080
6.	.0129	.0257	.0386	.0514	.0772	.0192	.038	.058	.076	.115
7.	.0175	.0350	.0525	.0700	.1050	.0261	.052	.078	.104	.157
8.	.0229	.0457	.0686	.0914	.1372	.0341	.068	.102	.136	.205
10.	.0357	.0714	.1072	.1428	.2144	.0533	.107	.160	.214	.320
15.	.0804	.1607	.2411	.3214	.4822	.1200	.240	.360	.480	.720
20.	.1429	.2858	.4287	.5716	.8574	.2130	.426	.639	.852	1.28
25.	.2232	.4464	.6696	.8928	1.34	.3333	.667	1.00	1.33	2.00
30.	.3214	.6428	.9642	1.29	1.93	.4798	.960	1.44	1.92	2.88
40.	.5714	1.14	1.71	2.28	3.42	.8530	1.71	2.56	3.42	5.12
50.	.8927	1.79	2.68	3.58	5.36	1.33	2.66	3.99	5.32	7.98
75.	2.01	4.02	6.03	8.04	12.06	3.00	6.00	9.00	12.00	18.00
100.	3.57	7.14	10.71	14.28	21.42	5.33	10.67	15.99	21.34	31.98

REMARKS.—The resistance as given above is for the first circular bend. Subsequent bends offer less resistance as the velocity is reduced. When the radius of bends exceeds five times the diameter of pipes the resistance is but little, and may be disregarded in most cases.

CHAPTER XIV.

WATER WHEELS.

No class of machinery has been more completely developed than Water Wheels. For thirty years past no improvements have been made that increased efficiency, although construction has been cheapened and simplified without lowering efficiency.

There are so many kinds of water wheels in use, and the particulars of each so fully described in trade circulars, that the present chapter will be confined to a general treatment of the subject. In fact, turbine water wheels are almost the only class that requires notice in a reference book of this kind at the present day.

(CONTINUED.)

NOTES, MEMORANDA.

Gravity Wheels.—The water, being loaded on one side in close buckets, acts directly by its gravity. The diameter of the wheels has to be equal to the head, producing slow axial velocity. The descent of the water not following a natural law and some head being lost at the bottom, the efficiency of gravity wheels is seldom more than sixty-five per cent.

Impact Wheels.—These operate by the water impinging directly against floats or vanes. When they have radial floats, as in the case of undershot and saw-mill wheels, their efficiency is not more than forty to fifty per cent. They are seldom made at the present day.

Reaction Wheels.—These operate by the reactive force of the water, discharged tangentially at the periphery from within the wheels, the action being from unbalanced pressure, and the efficiency not more than forty per cent. in average cases. These wheels include running water joints, are very liable to obstruction, and are almost out of use.

Pressure Wheels.—These operate by direct pressure of the water on vanes or pistons, and would give a high efficiency if their mechanism could be maintained. They involve not only rotary or sliding joints that have to retain water, but also, in the case of wheels, radial joints, that wear unequally and are impracticable for general purposes.

Tangent Wheels.—These differ from impact wheels in a more complete application of the water and in the arrangement of the floats so as to present their faces normal to the course of the water. They are also made to utilize the reactive energy of the water, and attain an efficiency of seventy-five to eighty-five per cent. with small columns of water under high heads.

Besides the water wheels named, and those other than turbines, there are a number of special construction, such as chain wheels with floats descending in tubes, current wheels, water engines, and so on, that do not require further notice here.

TURBINE WATER WHEELS.

These wheels, as a class, have been modified to meet nearly every requirement for both high and low heads, large and small volumes, and the various conditions of use. They have very nearly supplanted other kinds or classes of water wheels, and will no doubt do so entirely if the Girard type for high heads is included.

The action of water in turbine wheels is not very well understood in so far as determining what part the function of pressure exercises. They are commonly assumed to operate by impact and reaction, but these functions, judged by analogy to other wheels, do not account for the high efficiency of turbines. Pressure is evidently a principal function.

(CONTINUED.)

NOTES, MEMORANDA.

Inward-Flow Turbines.—These are the most numerous class of turbines. They are made with some variation as to curves, mechanism, and arrangement in all parts of the world, but especially in the United States, where this class of wheels has mostly been developed. They admit of a cheap concentrated construction, occupying not more than one half as much room as outward-flow wheels, and attain an efficiency beyond what was once thought possible.

The highest recorded efficiency for wheels of this class is as follows:

Philadelphia, 1876.	Per Cent.	Holyoke, Mass., 1874.	Per Cent.
Full gate	87.66	Full gate	91.30
⅞ gate	86.33	¾ gate	88.30
¾ gate	82.52	⅝ gate	75.60
½ gate	75.35	½ gate	72.77

The wheels employed in these tests varied from the standard types in respect to the entering water impinging against convex instead of concave surfaces, the faces gradually changing to a concave and volute form at the discharge.*

Fourneyron Turbines.—These are what may be called outward-flow turbines, the water being discharged at the periphery, the opposite of the inward-flow turbines. These wheels are of a very high class, principally made in France, but are more expensive to construct than other kinds, because of larger diameter and some other features of their arrangement.

Jonval Turbines.—In this class of wheels the course of the water is parallel to the axis of rotation, downward when the wheels revolve in a horizontal plane. They are of a very high class in so far as efficiency, and possess some structural advantages over radial wheels. The action of the water in Jonval wheels conforms as nearly as possible to hydrodynamic laws, except as to centrifugal force.

Figure 74 shows the form of vanes for Jonval turbine wheels.

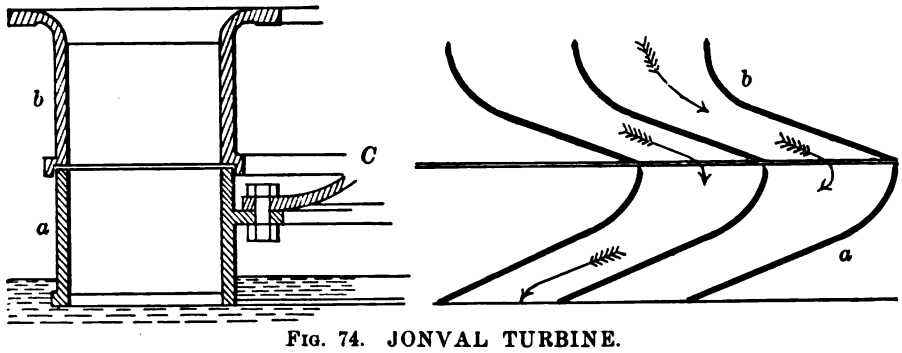

Fig. 74. JONVAL TURBINE.

* Tests of the T. H. Risdon inward-flow turbines.

(CONTINUED.)

NOTES, MEMORANDA.

The wheel or running part *a* is attached to the shaft by the flange *C*. The fixed portion *b* has issues as shown in the diagram at *b*, the water passing as indicated by the arrows.

Girard Turbines.—This important class of turbine wheels is not much known in the United States. The nearest approach to them among the wheels in use are those called "Hurdy-gurdy" on the Pacific Coast.

The Girard type of wheels corresponds in its main features to the Jonval, but acts wholly from impact of the water instead of pressure; consequently, can have any number of jets or inlets and use a large or small quantity of water without interfering with the efficiency and working conditions.

The diagram, Figure 75, shows the form of the issues and vanes.

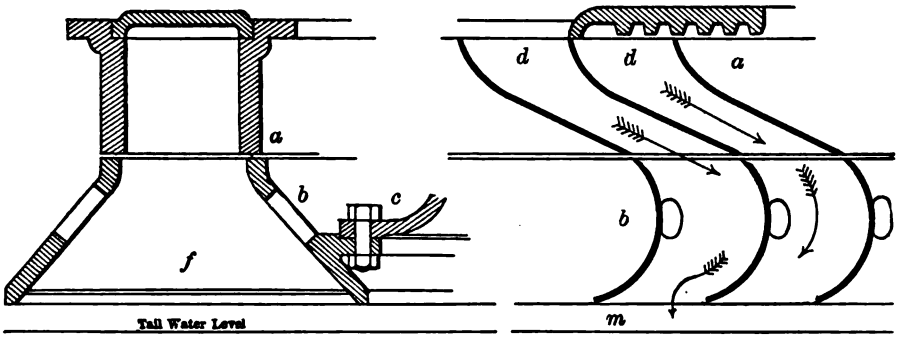

FIG. 75. GIRARD TURBINE.

In the drawing *a* is the fixed part and *b* the wheel. The latter is supported by the flange *c* connecting with the shaft. The inlet nozzles *d*, *d*, are arranged so that one or more can be uncovered by the gate on top. The wheel is widened toward the discharge, as shown at *f*, in the section, to permit a free escape of the water.

The Girard wheels attain a very high efficiency, and are especially adapted for high heads or pressures. They operate well under a head of 400 feet, and can be adapted for low heads by increasing the number of issues accordingly.

Speed of Water Wheels.—The velocity of spouting water is governed by the same law as that of falling bodies, and is in proportion to the square root of the head.

The speed of water wheels is commonly computed at one half the theoretical flow of water, so the square root of the head in feet multiplied by 240.6 gives the velocity of wheels in feet per minute, their speed being taken at the radial center of the floats or vanes.

The following table shows the speed of water wheels by this rule:

(CONTINUED.)

NOTES, MEMORANDA.

HEADS TO SIXTEEN FEET.

Head in Feet	2	3	4	5	6	7	8	9	10	12	14	16
Velocity in Feet per Minute . .	340	417	481	538	589	637	681	722	761	834	901	863

HEADS TO ONE HUNDRED FEET.

Head in Feet	18	20	24	28	32	36	40	50	60	70	80	100
Velocity in Feet per Minute . .	1021	1076	1179	1274	1362	1444	1522	1702	1865	2014	2153	2407

HEADS TO FIVE HUNDRED FEET.

Head in Feet	125	150	175	200	225	250	275	300	350	400	450	500
Velocity in Feet per Minute . .	2671	2736	3177	3387	3610	3802	3971	4164	4501	4814	5102	5367

REMARKS.—The diameter of water wheels is generally assumed at the middle of the floats, measuring from the center. This diameter multiplied by 3.14 and divided into the numbers in the lower lines of the tables above gives the number of revolutions per minute.

Efficiency of Different Kinds of Wheels.—The following table is an extract from a work on hydraulics. The efficiency named for different wheels is assumed to be from experiments, but is believed to be incorrect. It is included here mainly to show the assumed velocity of the different wheels.

Names of Wheels.	Wheel Velocities, with respect to the Water.		Highest Efficiency.	Average Efficiency.
Undershot Wheel .	At middle of floats,	43 per cent.	40 per cent.	27 to 30 per cent.
Poncelot Wheel .	At middle,	55 "	65 "	50 to 55 "
Paddle Wheel . .	At middle,	33 to 40 "	38 "	27 to 30 "
Breast Wheel . .	At middle of floats,	50 "	93 (?) "	70 to 75 "
Overshot Wheel .	At middle of floats,	50 "	80 "	70 to 75 "
Tub Wheel . . .	At middle of floats,	53 "	40 "	15 to 30 "
Whitelaw Wheel .	At circumference,	100 "	76 "	66 "
Fourneyron Wheel.	At inner circumference,	56 "	79 "	
Boyden Wheel . .	At inner circumference,	56 "	88 "	
Fontaine Wheel .	At mean circumference,	55 "	. . . . .	57 to 70 per cent.
Jonval Wheel . .	At external circumference,	70 "	72 per cent.	
Swain Wheel . .	At circumference,	76 "	84 "	68 to 78 per cent.
Girard Wheel . .	At mean circumference,	50 "	87 "	75 to 80 "
Tangential Wheels.	At mean circumference,	50 "	. . . . .	60 to 80 "

REMARKS.—Experiments in California have shown a higher rating for tangential wheels than is given above. The efficiency named is, however, an average for the different classes.

NOTES, MEMORANDA.

Selection of Water Wheels.—For all heads from 5 to 60 feet standard turbine wheels are best. For falls exceeding 60 feet the speed of common turbines, especially those with inward flow, is so great as to cause difficulty with bearings and danger to the wheels.

For heads from 60 to 400 feet Girard turbines or tangential wheels are preferable. Beyond this, hydraulic pressure engines, with solid pistons, or rams, and fibrous packing, are most suitable.

PROPELLING MACHINERY.

Notes on Paddle Wheels.—The slip of paddle wheels is about twenty per cent. for fixed floats and fifteen per cent. for feathering floats when their area is in correct proportion to resistance.

For sea-going steamers the floats should be buried at the center from 14 to 24 inches, owing to the size of the vessel. For river steamers the floats need not be buried more than 2 to 6 inches.

The diameter of paddle wheels varies from five times the stroke of engines for fast vessels to three times the stroke for slow vessels.

To find the area of floats for slow steamers, divide the indicated horse-power by the diameter of the wheels in feet at the center of the floats. This gives the area in square feet. For fast steamers, divide three fourths of the indicated horse-power by the wheels' diameter.

The pitch or distance between fixed floats should be from 30 to 40 inches; the faster a steamer the less the pitch should be.

The length of floats should be from six to seven tenths of their area in feet.

Notes on Propellers.—The theory of propeller wheels and the computations connected with them would fill a large volume. The main elements are as follows, taken from *Molesworth:*

V, representing knots per hour; P, the pitch of screws; and R, revolutions per minute.

$$R = \frac{101\ V}{P} \qquad P = \frac{101\ V}{R} \qquad V = \frac{PR}{101}$$

For miles per hour substitute 88 for the constant above.

This gives pitch revolutions and speed of vessels independent of slip, which is from fifteen to thirty per cent. This must be deducted from the quantities above.

The pitch of screws is governed by the area of the circle swept by their vanes compared to the immersed section of a vessel as follows:

Ratio of Screw's Plane to Ship's Section	2	2½	3	3½	4	4½	5	6
Ratio of Pitch to Screw's Diameter, 2 Blades	1.47	1.4	1.31	1.27	1.2	1.11	1.02	.8
Ratio of Pitch to Screw's Diameter, 4 Blades	1.98	1.89	1.76	1.71	1.62	1.49	1.37	1.08

The length of propeller wheels should be one sixth their diameter.

NOTES, MEMORANDA.

CHAPTER XV.

WATER-RAISING MACHINERY.

Water-Works Pumps.—For heavy continuous duty vertical Cornish or ram pumps are in many respects preferable. They have no sliding metallic surfaces under water, and are not affected by sand or grit, as in the case of piston pumps, but they have the objection of being single-acting and offering an irregular resistance to the driving power.

Double-acting piston pumps are now commonly employed for water works, the bucket-plunger type, with a single set of valves, being preferred in most cases for vertical pumps.

Steam engines for water raising act against an uniform resistance and, consequently, require simple valve gearing. Economy and endurance are the chief requisites. The latter quality calls for moderate piston speed and moderate strain on all bearing surfaces. These conditions and many others are favored by vertical cylinders.

The connection between the steam and water pistons should, whenever possible, be direct and involve no wearing joints. The stroke and valve motions are best governed by a crank shaft having no other functions.

The duty of water-works engines and pumps is commonly rated by the foot-pounds of water raised by 100 pounds of coal; but this is a most uncertain method of computing duty, unless the quality of coal is defined. An average duty is 1,000,000 gallons raised 100 feet with 2000 pounds of average coal.

In some cases 100,000,000 foot-pounds' duty is claimed for 100 pounds of coal consumed. This is more than double the amount of duty just stated, and possible only when every condition is favorable and the coal of the best quality.

Cost of Fuel.—The principal expense in raising water when steam-power is employed is the cost of fuel. This expense is dependent on the efficiency of the machinery in the ratio shown in the following table prepared from data by Mr. J. T. Fanning, C.E.

EFFICIENCY, EXPENSE, AND COST OF ENGINES.

ONE MILLION GALLONS RAISED 100 FEET HIGH DAILY.

Per Cent. Efficiency of Machinery	100	90	80	70	60	50	40	30	20
Cost of Coal per Year at $8 per Ton	$1,278	$1,420	$1,597	$1,825	$2,130	$2,555	$3,195	$4,259	$6,389
Comparative Cost of Machinery	65,000	60,000	55,000	50,000	45,000	35,000	30,000	25,000	20,000

REMARKS.—From this it will be seen how rapidly fuel expense increases as the efficiency of machinery diminishes. The expense of maintaining engines, attendance, repairs, and so on, is generally inversely as their first cost; so the interest on extra investment is often more than made up in this way.

NOTES, MEMORANDA.

Cost of Pumping Engines.—The first cost of average pumping engines, including all connected fittings, masonry for foundations and chimney, will approximate $5000 for each million of gallons raised 100 feet high daily. For example: 5,000,000 gallons raised 150 feet high daily.

$$5 \times 5000 \times 1.5 = \$37,500.$$

For centrifugal pumping plants employed for irrigating and draining purposes an average cost is $1000 for each 1000 gallons per minute for heads from 12 to 20 feet. For heads to 40 feet add $50 per 1000 gallons for each additional foot.

Boilers for Water Works.—The room occupied and the weight of boilers not being matters of importance, and high economy the main object, ample capacity and slow firing are preferable. This points to internally-fired boilers of the Lancashire or other arrangement of the kind without small flues. The durability, regular steaming, and other features of this class of boilers recommend them for water works.

Memoranda for Pumps.—The area of water passages should never be less than one third that of the main piston.

For slow-moving pumps the diameter of pipes should be one half, and for fast-moving pumps two thirds, that of the main cylinder.

When suction pipes are more than twenty diameters in length there should be an air vessel on the suction side.

The contents of suction air vessels should equal the displacement of one stroke of the pump. If the pipe is very long, double this size.

The contents of discharge air vessels should equal the displacement of two strokes for short pipes to four strokes for long pipes.

In the case of single-acting pumps three plungers or pistons produce a constant flow, and offer uniform resistance if the cranks are set at 120 degrees.

Suction pipes should be enlarged at the intake end a half or more their diameter, and tapered for a distance of four or more diameters to allow the water to start gradually.

The size of discharge passages or pipes between a pump and air vessel should be as large as the suction. Beyond the air vessel discharge pipes can be reduced one third in diameter.

The size of suction pipes should be increased with their length, which should not exceed 27 feet. Their area should be twice as much for 27 feet as it is for 2 feet. The following table shows the velocity of flow in suction pipes of different lengths.

VELOCITY OF WATER IN VERTICAL SUCTION PIPES.

Suction Head in Feet	2	4	6	9	12	15	18	21	24	27	30	33
Velocity of Water in Feet per Second	38	37	36	34	31	29	27	24	21	17	12	0

NOTES, MEMORANDA.

Common Suction Pumps.—These are single acting, used for wells and hand purposes, and are commonly arranged with levers, so the work is performed by down thrust of the hand. At slow motion their capacity is something less than the piston displacement, but at high speed and with long pipes the flow becomes in a measure continuous and in excess of the displacement. They require only two valves.

The table following shows the computed capacity of these pumps.

CAPACITY OF SINGLE-ACTION PUMPS IN GALLONS AND CUBIC FEET.

Diameter of Pumps in Inches	2	2½	3	3½	4	5	6
Gallons Discharged, 12-Inch Stroke . . .	.168	.254	.366	.499	.652	1.01	1.46
Cubic Feet, 12-Inch Stroke	.021	.034	.049	.066	.087	.136	.196

(CONTINUED.)

Diameter of Pumps in Inches	7	8	9	10	12	14	16
Gallons Discharged, 12-Inch Stroke . . .	1.99	2.61	3.34	4.08	5.87	7.99	10.4
Cubic Feet, 12-Inch Stroke	.267	.349	.441	.545	.785	1.06	1.39

REMARKS.—Double-acting pumps perform double the duty given above. For longer or shorter stroke, multiply the quantities above by the stroke in inches and divide by 12. In ordinary cases five per cent. should be allowed for waste.

Double-Action Pumps.—These have two sets of valves and act equally each way, the cubic contents of the piston rod being deducted from one stroke.

The valves being arranged in most cases to close by their gravity on horizontal seats, the pump cylinders are usually made horizontal to favor this arrangement.

There is such a wide range of modification that rules for proportions and arrangement will be useless.

Double Pumps.—When there are two pumps combined, operating alternately through one set of pipes, the flow of water is continuous, and the size of the pipes can be reduced accordingly. There is also uniform resistance to the driving power and much to recommend the method, especially when there is a large amount of duty to perform. Double pumps are almost essential in the case of driving by water wheels, and generally cost no more than single pumps with the fly wheels required for their regulation.

Triple Pumps.—Triple single-acting pumps with three rams are coming into use for forcing purposes. They deliver a constant stream, offer uniform resistance to the driving power, and cost much less than two double-acting pumps. They are especially suited for electric motors and adapted to all kinds of duty.

NOTES, MEMORANDA.

DIRECT-ACTION STEAM PUMPS.

Since the invention of the method of operating the steam valves of these pumps by means of an auxiliary steam piston, controlled by the main piston, they have come extensively into use; more because of a systematic manufacture and convenience than any claim of economy that can be made in their favor.

The duplex type, having two steam and water cylinders, differs from the single pump only in the auxiliary piston being amplified into a second pumping engine, the principle remaining the same in both cases.

Direct-acting pumps use steam full stroke without expansion, and, as the range of the stroke is dependent upon the valve movement, there is generally a waste of clearance amounting to twenty per cent. or more; so the efficiency of the engines is seldom more than fifty per cent.

The commercial classes of these pumps have in most cases contracted valve area and sinuous water passages, so the average working efficiency, especially at high speed, is probably not more than thirty-five per cent.

There is not, that the author is aware of, any recorded data respecting the working conditions and efficiency of common direct-acting steam pumps; a matter much to be wondered at considering the extent and importance of the manufacture in this country.

An inference from this fact is that the convenience, compactness, and protection of the working parts more than compensates for the waste of steam, and this is certainly true in many cases, especially for temporary purposes.

The following table gives average proportions, capacity, and speed for direct-acting steam pumps.

AVERAGE PROPORTIONS FOR SMALL DIRECT-ACTION STEAM PUMPS.

Diam. of Steam Cylinder.	Diam. of Water Cylinder.	Stroke in Inches.	Gallons per Stroke.	Capacity per Minute under Favorable Conditions.	Size of Pipes.			
					Steam.	Exhaust.	Suction.	Delivery.
3	2	3	.04	150 strokes, 6 gal.	3/8	1/2	1	3/4
3 1/2	2 1/4	4	.07	150 " 10 "	1/2	3/4	1 1/2	1
4 1/2	2 3/4	6	.15	150 " 22 "	3/4	1	2	1 1/2
5 1/2	3 1/2	8	.33	125 " 41 "	3/4	1 1/4	2 1/2	2
6 1/2	4 1/4	10	.61	100 " 61 "	1	1 1/2	3	2 1/2
8	5	10	.84	100 " 84 "	1 1/4	2	3 1/2	3
8	5	12	1.02	100 " 102 "	1 1/4	2	4	3 1/2
10	6	12	1.47	100 " 147 "	1 1/2	2	4 1/2	4
12	7	12	2.00	100 " 200 "	2	2 1/2	5	4 1/2
12	8	12	2.61	100 " 261 "	2	2 1/2	6	5
14	9	18	4.96	75 " 372 "	2 1/2	3	7	6
14	10	18	6.12	75 " 459 "	2 1/2	3	8	7
16	10	18	6.12	75 " 459 "	2 1/2	3 1/2	8	7
16	10	24	8.16	60 " 489 "	2 1/2	3 1/2	8	7
18	12	24	11.74	60 " 704 "	3	4	10	8
20	14	24	16.00	60 " 960 "	3 1/2	4 1/2	12	10

NOTES, MEMORANDA.

Bucket-Plunger Pumps.—This name is applied to a class of pumps now coming more into use, and possessing some advantages over other kinds. They consist in the combination of a ram and a piston, as shown in the drawing, Figure 76, which is a vertical section through the pump barrel.

These pumps are double-acting in so far as discharge and resistance, but single-acting in the suction pipes. There is but one set of valves, the same as a single-acting pump. The main pump barrel *a* has twice the area of the ram *b*. There is a valve *d* on the piston *S*, and another one, *e*, at the bottom of the barrel.

On the up stroke the main chamber at *o* is filled from the suction *m*, and the water in the annular space *c* is expelled through the discharge pipe *n*.

On the down stroke the valve *e* closes and the ram *b* displaces its cubic contents, the same as in a plunger pump.

The following dimensions and data for small bucket-plunger pumps will be useful for reference.

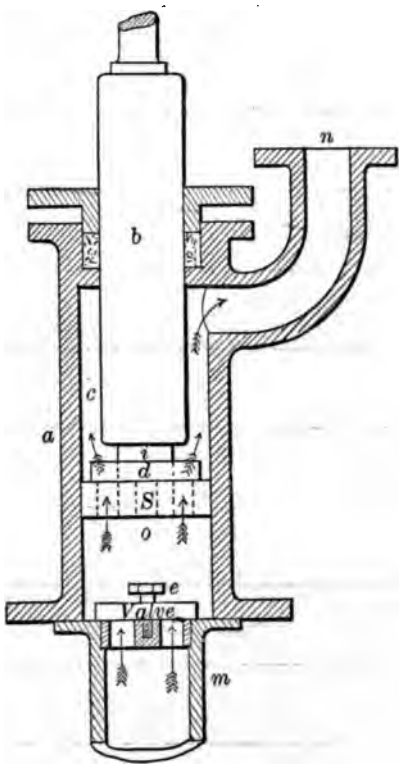

FIG. 76. BUCKET-PLUNGER PUMP.

BUCKET-PLUNGER PUMPS.

Diameter of Main Cylinder in Inches . .	6	7	8½	10	12	14	17
Diameter of Rams in Inches	4½	5	6	7	8½	10	12
Stroke in Inches	10	12	15	18	20	24	28
Average Strokes per Minute	100	90	80	70	60	50	40
Gallons Discharged per Minute	61	92	147	210	294	408	548

Open-Top Pumps.—In a pump arranged for lifting only, no packing gland is required at the top. Open-top pumps, especially those for deep wells, should have a wooden bucket rod, with a cross section equal to the rams above. Such a rod, with its metal fittings, is balanced by its buoyancy in the water, and can be made of any length. The discharge in such case is equal for the up and down strokes, and by counter-weighting, the power may also be equally divided. When two pumps are employed they can be attached to the ends of a walking beam.

NOTES, MEMORANDA.

Double-Cylinder Pumps.—Pumps with two cylinders and no stationary valves, as shown in Figure 77, are made to some extent in Europe.

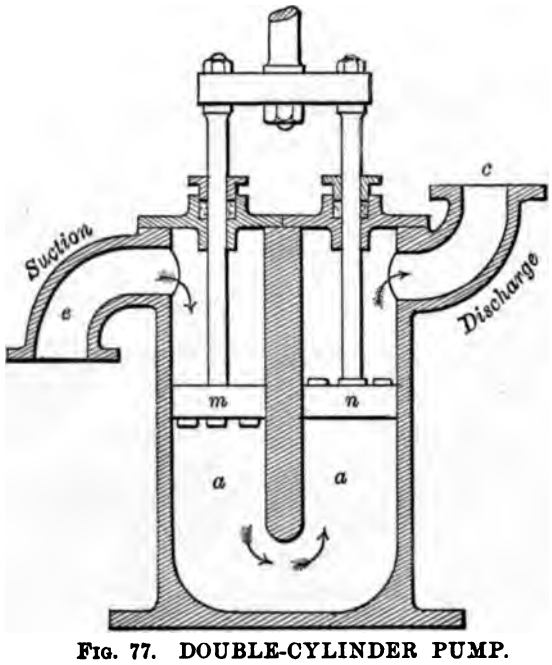

FIG. 77. DOUBLE-CYLINDER PUMP.

The two barrels, *a*, *a*, are connected at the bottom. The suction inlet *e* and the discharge one *c* are both placed at the top. The two pistons *m* and *n* are rigidly connected above and move together. The one *m* has valves opening downward and the one *n* valves opening upward. When the pistons descend the one *m* forces the water through *n*. On the up stroke the piston *n* draws the water through *m*, thus causing a flow coincident with the piston movement each way, the same as a double-acting pump.

This ingenious pump might meet with a wide application if it were not for the diagonal strain produced on the piston-rod connections, but this feature is no doubt enough to balance the advantages gained in other respects.

CHAPTER XVI.

CENTRIFUGAL PUMPS.

These important water-raising machines are of recent origin, and not so well understood as piston pumps. Their operation is very simple and their construction apparently so, but they involve many intricate problems in hydrodynamics, and rules for their form and proportions are by no means easy or uniform.

The conditions of use must frequently modify the mathematical proportions. For example: The area of water ducts cannot be made to maintain uniform or

(CONTINUED.)

NOTES, MEMORANDA.

regularly accelerated velocity of the water; the speed of wheels has to be governed in most cases by the maintenance of the spindles; the diameter of wheels and the form of the driving vanes cannot always be adapted to the head.

For raising large quantities of water against heads of fifty feet or less, centrifugal pumps are superior to the piston kind and cost much less, not only as an investment, but also in maintenance. There are no valves, no running contact of metal surfaces in the water, and no wear except of the journals.

For heads exceeding 50 feet the capacity and efficiency of centrifugal pumps are not well understood. The author has constructed centrifugal pumps to operate against heads of 80 to 100 feet that give a greater efficiency than was possible with common piston pumps under the circumstances. They were in crowded positions, exposed to grit and sand, and without skilled attendance.

Capacity.—The capacity of centrifugal pumps is enormous in proportion to their weight and dimensions. The discharge is constant and uniform, so the velocity of the water may be 10 feet or even 20 feet per second, without much loss. A fair rating is 40 gallons per minute for each inch of area in the discharge throat, but they are frequently rated at twice this amount. It may also be remarked that the working efficiency of centrifugal pumps is constantly tested and known, while that of other commercial pumps is rarely known and is seldom considered.

Speed of Pump Wheels.—This is governed by the law of falling bodies, the speed at the periphery of the wheels equaling the velocity the water would attain in falling the distance it is raised, with enough added to produce the flow.

It is another application of the formula, $V = \sqrt{2gH}$, the speed equaling eight times the square root of the head; but this only balances the head, and, as just remarked, is not enough to cause a flow, so the speed of the pump wheels is commonly computed, in feet per second, at ten times the square root of the head, or in feet per minute, six hundred times the square root of the head.

Therefore, to find the speed of pump wheels in revolutions per minute, multiply the square root of the head by 600 and divide by the circumference of the pump wheels in feet.

Diameter of Wheels.—The theoretical diameter of wheels is such that the water passing will not make more than one revolution or move through 360 degrees in the casing; but this is inadmissible in practice, as well as most other rules based on velocity, volume, and head.

To meet the various conditions of common use it is better to be governed by the speed of the spindles, dividing 1000 by the diameter of the spindles for revolutions per minute, making the diameter of wheels accordingly. In cases of driving by directly-connected engines the diameter of wheels can be increased without much loss of power.

(CONTINUED.)

NOTES, MEMORANDA.

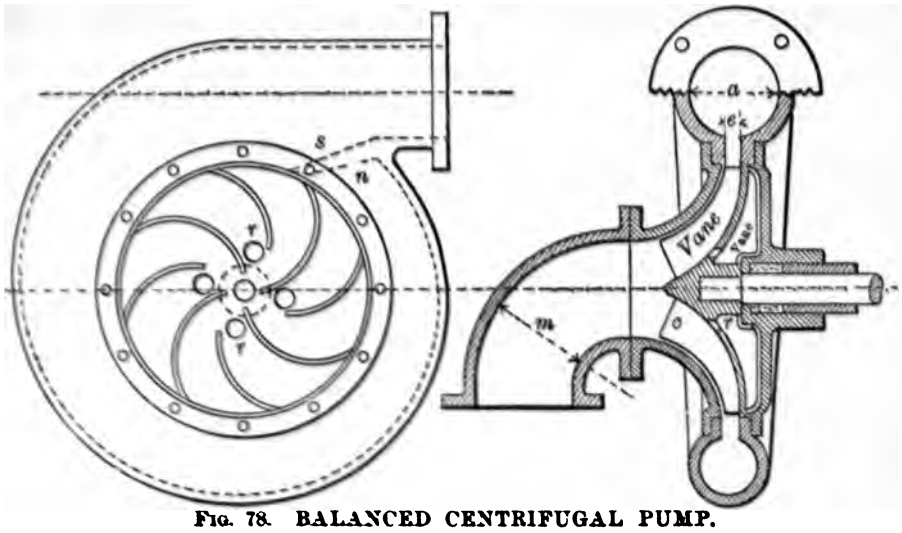

FIG. 78. BALANCED CENTRIFUGAL PUMP.

The following particulars of speed, power, and so on, are taken from the author's practice for common commercial pumps, arranged as nearly as possible to meet the various conditions of common use. A set of sizes arranged in this manner will provide for two thirds the cases where such pumps are required, the dimensions being an average for different heads.

AVERAGE DIMENSIONS, SPEED, POWER, ETC.

Size of Pumps, or Diameter of Discharge.	2	2½	3	4	5	6	7	8	10	12	16	20	24
Average Number of Gallons Discharged in 1 Minute	150	250	350	600	800	1200	1500	2000	3000	4500	8000	13,000	20,000
Diameter of Suction Pipes	3	3	4	5	6	7	8	9	12	14	18	20	24
Diameter of Pump Wheels in Inches .	15	16	18	20	22	24	26	28	30	30	32	34	36
Approximate Horse-Power for each 10 Feet of Head . . .	1	1½	2	3	4	6	7	8	12	20	30	40	75
Number of Revolutions per Minute for a Head of 10 Feet . .	400	360	340	300	275	255	235	215	205	200	190	180	170
Number of Revolutions per Minute for a Head of 15 Feet . .	620	575	590	525	480	440	410	380	355	350	330	315	290
Number of Revolutions per Minute for a Head of 25 Feet . .	760	700	655	580	530	490	465	415	395	390	365	350	320
Number of Revolutions per Minute for a Head of 36 Feet . .	890	835	760	675	615	570	520	485	455	425			
Number of Revolutions per Minute for a Head of 50 Feet . .	1020	960	875	775	710	655	600	560					

REMARKS.—The number of revolutions given above are approximate only. The horse-power given in the fifth line is to aid in selecting engines and not a measure of power. The heads included are for a class of pumps and not as a limit. It may be exceeded, especially by the smaller sizes.

(CONTINUED.)

NOTES, MEMORANDA.

Pump Casing.—This should, whenever possible, be of the volute form, shown in Figure 78, especially for low heads. The object is to utilize the tangential energy of the water as far as possible by producing an uniform flow around the wheel.

The force of this effect is not uniform, as is commonly supposed, but depends upon the relative velocities, or how near the velocity of the wheel conforms to that of the water in the casing. The latter is constant and the former as the square root of the head, so the tangential effect almost disappears at 50 feet of head when the velocity of the wheels is six to eight times that of the water in the casing.

The area of the beginning of the volute at *n* should be one fourth of *a*, so the radial flow will not be impeded at this point. For the same reason the cut-off vane *s* should be thin and sharp at the point.

Balancing the Thrust on Wheels.—This is commonly accomplished by receiving the water at both sides of a pump by means of a forked suction pipe, the driving spindle passing through the suction passage at one or both sides. This construction leads to many inconveniences: the water has to make more angles, the curves of the wheel faces have to be flat, the suction pipes are beneath the pumps, and the bearings exposed to the water.

In the construction shown in Figure 78 the wheels are balanced by the simple expedient of employing vanes on the back as well as the face of the wheel, centrifugal action being alike on each side, but the work being performed by the front vanes alone. In this manner the spindle bearings are not in contact with the water. The water ducts are all free, of easy curves, accessible, and full size at all points.

Suction Pipes.—These are commonly made larger than discharge pipes to diminish the flow on the inlet side. If the pipes are of uniform bore this is desirable, but if the suction pipes are tapered, as they all ought to be, there is no reason for different dimensions at *a* and *m*. The taper of suction pipes should be enough so the flow at the inlet of the pipe will be from 4 to 6 feet per second. In this way the resistance at the inlet is reduced and the ascending water acquires its velocity gradually. The same rule applies to long discharge pipes; they should be gradually enlarged at the beginning, until the velocity is reduced to 5 feet per second or less.

Water Passages.—These, by the rules of hydraulic science, should be uniform, and the nearest approach to this is the best practice. The throats at *e* cannot, however, be reduced in practice to the same area as *a* or *m*, unless the wheels are of small diameter.

This dimension must be made large enough to pass such obstructions as may find their way into the pump and with area at least double that of *a*. In other parts the area of the passages can conform to *m*.

NOTES, MEMORANDA.

Incased Pump Wheels.—Wheels of this kind are often employed without their effect and working conditions being known. They change totally the degree of pressure in the casing of a pump. They are commonly adopted by makers at first and then abandoned after some experience.

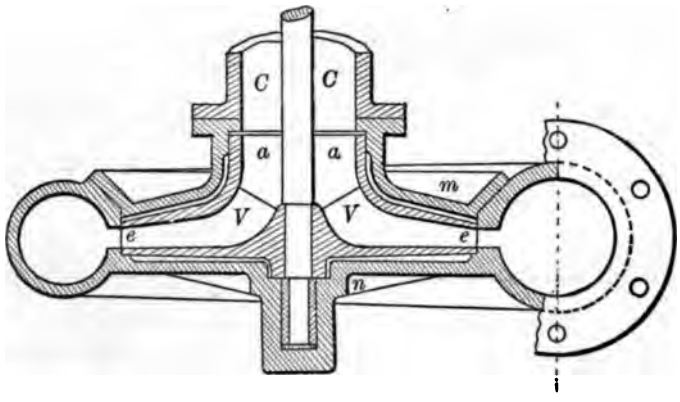

FIG. 79. INCASED PUMPING WHEEL.

Within a wheel of this kind the pressure at *a*, *a*, is negative or a partial vacuum, but increases from there to the periphery at *e*, where the pressure is equal to that of the discharge head.

Within the external casing the pressure at all points is equal to the discharge. With a wheel 24 inches in diameter and a head of 40 feet the plates *m* and *n* will sustain a pressure of 8000 pounds on each.

When a single inlet is used as at *a*, *a*, the lateral or upward thrust on the wheel will be equal to the area of the inlet multiplied into the discharge pressure. If this area is 50 inches and the head 50 feet, there will be an upthrust on the pump spindle of more than 1000 pounds.

It is a matter of astonishment that these great changes should take place in the working conditions of a centrifugal pump by incasing the wheel vanes. Most of the results described have been discovered by the author in his own practice, and are not treated upon in previous writings on the subject.

These wheels are inexpedient, unless in the case of vertical pumps it is desirable to support long driving shafts by means of the upthrust. In the case of double inlets such wheels cause the same pressure in the casing, and any leak around the inlet nozzles permits circulation of the water, with a corresponding loss of effect.

Memoranda for Centrifugal Pumps.—For high speed the wheels should be of steel, malleable iron, or brass.

To ascertain the gross power required, multiply the number of gallons per minute by the height in feet and divide by 2500.

To find the revolutions per minute, multiply the square root of the head in feet by 600 and divide by the circumference of the wheels in feet.

(CONTINUED.)

NOTES, MEMORANDA.

The resistance to a pump, or its capacity, is as the smallest area of the discharge throat or nozzle.

The loss of power by increasing the size of wheels, for directly-connected engines, is generally compensated by the avoidance of gearing.

When a foot valve is employed, but in no other case, a pump can be charged by filling it with water.

If the valve is at the pump, on either the suction or discharge side, air- or steam-charging apparatus is required.

When the discharge head exceeds 20 feet there should be a check valve above the pump.

Short discharge pipes should have a half more area than the pump nozzle, and long ones double the area.

Vertical discharge pipes more than 50 feet long should be three to four times the area of the pump nozzle.

When water is discharged at varying levels into water, siphon pipes should be employed.

Spindle bearings should be provided with large boxes to contain soft grease for lubrication.

For operating in pits, pumps should be vertical and driven by shafts from the top.

In the case of small vertical pumps the water inlet should be on the top.

Bearings exposed to the water should be loose and made of cast iron.

Pumps should have the spindle packing exposed to suction.

The rotary parts of vertical pumps should be balanced by water thrust.

The lateral thrust on incased wheels can be balanced by vanes on their outer faces.

CHAPTER XVII.

PIPES AND FITTINGS.

General Remarks.—Theoretical dimensions for cast-iron pipes and fittings have to be exceeded when patterns are made for general purposes. Such castings are commonly made to sustain a pressure of 200 to 300 pounds per inch, and in some cases heavier, to meet the convenience or risks of moulding.

Common pipe angles, such as are used for gas, are not suitable for water; the curve is too abrupt, and the change of bore alters the velocity of the water, causing a diminished flow or loss of power in pumping.

There being at this time no uniform system of flanges for pipes, the dimensions assumed have no reference to the sizes employed by different makers of pipes and fittings. Such sizes vary in an extraordinary degree. The diameters of flanges are generally larger than required and, for that reason, unsymmetrical in appearance.

NOTES, MEMORANDA.

Pipe Angles.—In the diagrams below, Figure 80 shows an angle for hydraulic purposes that can be arranged with either sockets or flanges. Figure 81 is a common flanged angle of short radius.

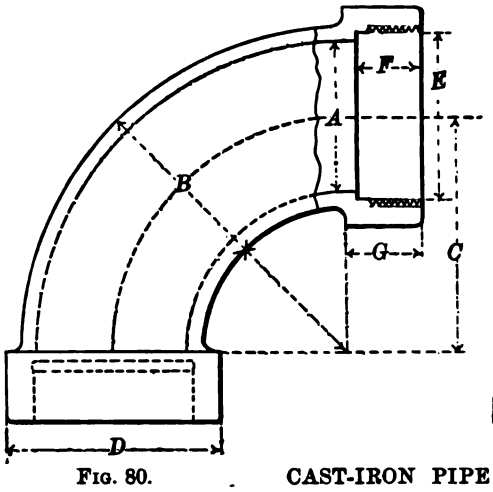

FIG. 80.

CAST-IRON PIPE ANGLES.

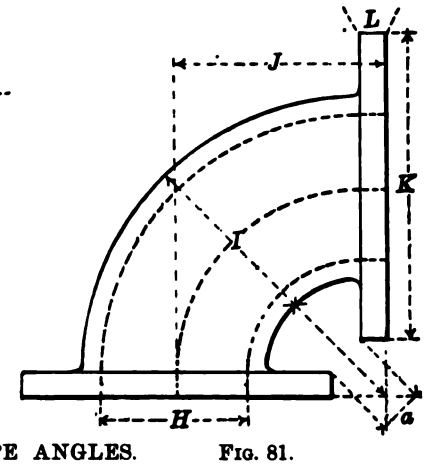

FIG. 81.

FIG. 80. DIMENSIONS IN INCHES.

A	1	1¼	1½	2	2½	3	3½	4	4½	5	6	8
B	1 7/16	1¾	2	2⅝	3⅛	3¾	4¼	4⅞	5⅜	6	7	9⅛
C	1½	2	2¼	3	3¾	4½	5¼	6	6¾	7½	9	12
D	1⅞	2¼	2⅝	3¼	3¾	4¼	5	5½	6	6¾	8	10¼
E	1⅛	1⅜	1⅝	2⅛	2⅝	3⅛	3⅝	4⅛	4⅝	6 3/16	7¼	8¼
F	⅝	¾	⅞	1	1⅛	1¼	1⅜	1½	1⅝	1¾	1⅞	2¼
G	⅞	1	1¼	1¾	1½	1⅝	1⅞	2	2⅛	2¼	2½	2⅞

FIG. 81. DIMENSIONS IN INCHES.

H	2½	3	3½	4	4½	5	6	7	8	9	10	12
I	3¼	3¾	4⅜	4⅞	5⅜	6	7	8	9⅛	10⅛	11¼	13⅜
J	3½	4	4½	5	5½	6	6½	7	8	9	10	12
K	6	6½	7¼	8	8½	9½	10½	12	13	14	15½	18
L	½	½	9/16	9/16	⅝	⅝	11/16	11/16	¾	¾	⅞	1

REMARKS.—The flange dimensions apply to either figure. The dimension *E* is the cored size. The dimension *J* is made to even inches and halves, for convenience in laying out and arranging pipes, and is long enough to provide clearance at *a*. The thickness given in the tables, *B–A* and *I–H*, is minimum.

NOTES, MEMORANDA.

Flanges for Wrought-Iron Pipes.—These are sometimes made plain, without bosses for bolts, but should not be so unless they require to be turned and finished. Such flanges are weak, and require to be of larger diameter.

For permanent pipes of 6 inches and larger diameter it is better to rivet the flanges on by boring them to a hard fit and turning a lip on the inside.

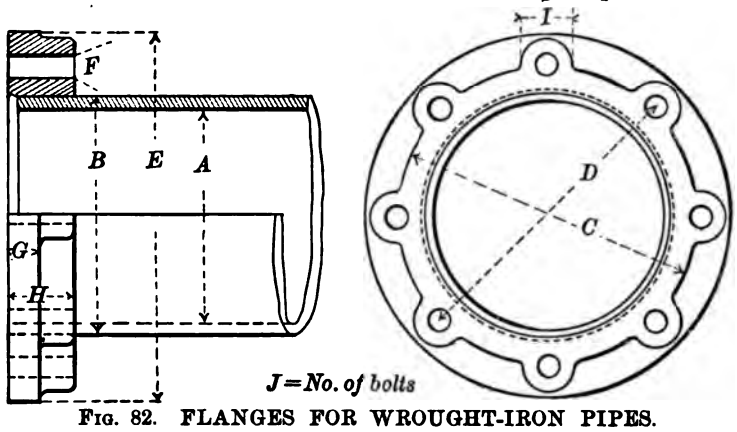

FIG. 82. FLANGES FOR WROUGHT-IRON PIPES.

DIMENSIONS IN INCHES.

A	1¼	1½	2	2½	3	3½	4	5	6	8	10
B	1⅜	1⅝	2⅛	2⅝	3⅛	3⅝	4⅛	5⅛	6⅛	8⅛	10⅛
C	2¼	2¾	3¼	3¾	4½	5	5¾	6⅝	7¾	10	12
D	2⅝	3¼	3¾	4¼	5	5⅝	6⅜	7¼	8⅜	10¾	12¾
E	3¾	4½	5½	6	6½	7½	8½	9½	10⅜	12½	15
F	⅜	½	½	½	½	⅝	⅝	⅝	⅝	¾	¾
G	½	⅝	⅝	¾	¾	⅞	⅞	1	1	1⅛	1¼
H	⅞	1	1⅛	1¼	1⅜	1⅜	1½	1½	1⅝	1¾	2
I	1	1¼	1¼	1¼	1¼	1½	1½	1½	1½	1¾	1¾
J	4	4	5	6	6	6	6	8	8	8	10

REMARKS.—The dimension *B* is for cores, not finished size, and varies with the thickness of pipes.

Collar Joints.—In the case of continuous pipes from 3 to 5 inches diameter, especially when laid under ground, joints can be made with collars packed with lead. The collars should be of malleable iron, one fourth thicker than the pipes and one to one and a quarter diameters long.

When the size of the pipes is uniform the lead can be cast into the collars before they are applied. The lead should be from three sixteenths to one fourth inch thick, so as to admit stiff calking tools.

This method is especially suitable for "tubing" which has uniform outside diameter. In the case of pipes larger than 5 inches bore it is better to cast the lead on the pipes after the collars are in position.

NOTES, MEMORANDA.

Cast-Iron Pipe Flanges.—The dimensions given below correspond to Figure 81. For pipes exceeding 12 inches bore the number of bolts should be one for each inch of the pipe's diameter, taking the next even number above. From 12- to 20-inch pipes the flanges should project $2\frac{1}{4}$ to $2\frac{1}{2}$ inches, and from 20- to 40-inch pipes, project $2\frac{1}{2}$ to 3 inches, with a limit of 1 inch for the diameter of bolts.

DIMENSIONS IN INCHES.

A	4	$4\frac{1}{2}$	5	6	7	8	10	12
B	$4\frac{7}{8}$	$5\frac{3}{8}$	6	7	8	$9\frac{1}{8}$	$11\frac{1}{4}$	$13\frac{3}{8}$
C	8	$8\frac{1}{2}$	$9\frac{1}{2}$	$10\frac{1}{2}$	12	13	$15\frac{1}{2}$	18
D	$\frac{9}{16}$	$\frac{5}{8}$	$\frac{5}{8}$	$\frac{11}{16}$	$\frac{11}{16}$	$\frac{3}{4}$	$\frac{7}{8}$	1
E	$\frac{1}{2}$	$\frac{1}{2}$	$\frac{1}{2}$	$\frac{5}{8}$	$\frac{5}{8}$	$\frac{5}{8}$	$\frac{3}{4}$	$\frac{3}{4}$
F	6	6	8	8	10	10	12	12

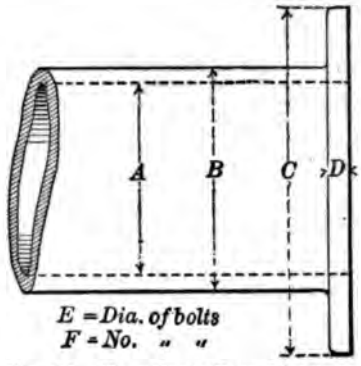

FIG. 83. CAST-IRON PIPE FLANGES.

Riveted Pipes.—On the Pacific Coast a great many of the water-conducting pipes are made of sheet iron of surprising thinness. The following table shows the dimensions of a few sizes.

THICKNESS AND STRENGTH AND WEIGHT OF SHEET-IRON PIPES.

Quantities.	Pipes, 6 Inches Diameter.				Pipes, 12 Inches Diameter.			
Thickness of Iron by Wire Gauge.	18	16	14	12	16	14	12	10
Pressure in Lbs. per Square Inch .	122	162	207	272	81	104	136	168
Weight in Lbs. per Foot of Length.	$4\frac{1}{4}$	$5\frac{3}{4}$	$7\frac{1}{2}$	10	$11\frac{1}{4}$	14	$18\frac{1}{2}$	23

(CONTINUED.)

Quantities.	Pipes, 18 Inches Diameter.				Pipes, 24 Inches Diameter.			
Thickness of Iron by Wire Gauge .	14	12	10	8	12	10	8	6
Pressure in Lbs. per Square Inch .	69	91	111	138	68	84	103	127
Weight in Lbs. per Foot of Length.	$20\frac{1}{2}$	$27\frac{1}{4}$	34	41	$35\frac{1}{2}$	$43\frac{1}{2}$	53	$67\frac{1}{4}$

REMARKS.—This pressure seems enormous compared with the thickness of the metal, but the proportions are taken from regular practice. It is based on a tensile strain of 13.333 pounds for the plates. The joints are sometimes made by shoving the ends one into the other with canvas packing. When the pressure is considerable, collars of sheet iron with a lining of lead are put over the joint. Large sizes are continuously riveted.

NOTES, MEMORANDA.

SECTION FIFTH.

CHAPTER XVIII.

MECHANICAL DRAUGHTING.

The term draughting, or drawing, is applied to both delineating and designing machinery. In the sense of designing it may be called a constructive process in which artistic skill has little or no part. Drawing is commonly believed to be a kind of accomplishment acquired by example or instruction, which is true of delineating or drawing from copies or models, but not of what is understood by this term in actual practice.

A draughtsman is supposed to have a wide and diversified acquaintance with all branches, theoretical and practical, pertaining to construction, to have a knowledge of precedents of all kinds, and to combine, arrange, invent, and design new work of every description.

The use of instruments and the conventional methods of displaying work form but a small part of these qualifications, and can be studied from books prepared for the purpose, of which there are a large number.

Draughting Paper.—Sheets of paper of whatever kind for machine drawings should be of one size, no matter what the amount of work on them may be, and the paper, except for sketches, should be of the best. For shaded work, or any that has to be traced, Whatman paper is superior to any other.

Bond paper, 19 × 30 inches, or larger sizes if the work demand it, is very suitable for machine drawings. The surface of this paper is hard; photo copies can be made the same as from tracings, and the cost of the paper is not one fourth as much as for opaque paper; besides, the extra expense and uncertainty of tracing is avoided.

Size of Draughting Paper.—The names and sizes given apply to what is called "Whatman's paper," of which there are two kinds, hot pressed and cold pressed. The hot pressed, with a hard, smooth surface, is preferable for machine drawings, and the size most convenient is "Double Elephant" and half sheets of the same.

NAMES AND DIMENSIONS IN INCHES OF WHATMAN PAPER.

Demy.	Medium.	Royal.	Sup. Royal.	Imperial.	Columbier.	Atlas.	Double Elephant.	Antiquarian.
20 × 15	22 × 17	24 × 19	27 × 19	30 × 22	34 × 23	34 × 26	40 × 27	52 × 31

There is, however, in modern practice little, if any, requirement for drawing paper of this kind, and the transparent kinds that permit direct photo copies from the original are preferable in every way.

NOTES, MEMORANDA.

Photo Paper.—This is sometimes prepared at the works where it is used, but if procurable at its true value it is better to purchase rolls of it ready prepared. Such rolls can be placed in a narrow box with a hinged lid, and the paper drawn out and cut off when wanted without risk of exposure to light, as there is when it is kept in flat sheets.

Developed Curves.—In most draughting rooms will be found a series of curve patterns that are a source of annoyance and expense, and generally of no use in machine designing. A single pattern, as shown in Figure 84, will, with true curves made with compasses, meet all the requirements of common practice. The two ends are simple parabolic curves that may be generated from the present diagram.

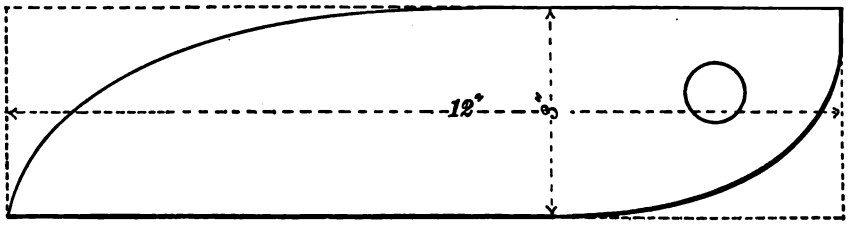

FIG. 84. DEVELOPED CURVE PATTERN.

There are required of these patterns five sizes, or scales, as follows: $\frac{3}{4} \times 3$ inches, $1\frac{1}{2} \times 6$ inches, 3×12 inches, 6×24 inches, and 12×36 inches, all made to conform with each other and answering for the following scales: one eighth, one fourth, one half, full size, and double size.

The first three are for use in making drawings, and the two larger ones in the pattern shop. In this way a pattern maker has no laying out to do, and there are no mistakes or time lost. The one shown above is commonly employed for one-half scale, but can also be used for one-fourth scale, in which case the pattern maker will use the double-scale one, 12×36 inches, to reproduce the curves. This system has been well tested. Its value will be at once apparent to any one who has suffered the annoyance of a "set" of draughtsman's curve patterns.

Dimension Lines.—The custom is to make dotted lines for dimensions, but for sun printing this is not necessary. If the main lines are made heavy as they should be, dimension lines can be drawn full with paler ink and finer, so they will not confuse the rest. Dotted lines for dimensions become confused with those for interior parts and are tedious to make. A good plan is to draw dimension lines with neutral color, so they may be readily distinguished on the original drawing as well as on copies.

NOTES, MEMORANDA.

Section Lines.—These are commonly made with a pen, and should be in the case of fine and exact drawings, or those made to a small scale; but for coarser work lines made with a brush and pale ink answer very well. It requires some experiment to learn how dark to make them, but when once understood it saves a great deal of time.

Sketch Drawing.—It is more difficult to learn how to make cheap effective sketches than fine drawings. For sketches drawn to scale, buff paper is best. Pencil lines should be very heavy and round faces shaded with a soft pencil or brush. A sketch is supposed to convey a conception of the work by illustration as well as dimensions. The skill of a draughtsman is commonly more apparent in making sketches than regular drawings.

Elements of a Circle.—These consist of the following parts and terms illustrated in Figure 85:

Area,	the whole plane included.
Circumference,	*B* to *B*, whole periphery.
Radius,	*A*, *B*.
Diameter,	*C*, *D*.
Chord,	*E*, *F*.
Sector,	*A*, *G*, *B*.
Segment,	*E*, *I*, *F*.
Quadrant,	*A*, *B*, *D*.
Zone,	*C*, *D*, *E*, *F*.
Tangent,	*B*, *H*.

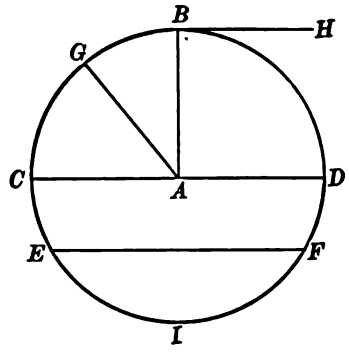

FIGURE 85.

To find the area, multiply the square of the diameter by .785.
To find the area, multiply the diameter by the circumference and divide by 4.
To find the area, multiply half the diameter by one half the circumference.
To find the circumference, multiply the diameter by 8.141.
To find the diameter, multiply the circumference by .318.
To find the diameter, divide the circumference by 8.141.
To find the diameter, multiply the square root of the area by 1.128.
To find the side of an equal square, multiply the diameter by .886.
To find a circle equal to a square, multiply one side by 1.128 for the diameter.

Trigonometrical Terms.—Trigonometry is that branch of mathematics which treats of plane triangles and their solution. The purpose is the mensuration of surfaces, the measurement of distances, and to express the relation between quantities. In every plane triangle there are three sides and three angles. When any three of these elements are given, one being a side, the other three can be determined by computation.

(CONTINUED.)

NOTES, MEMORANDA.

TRIGONOMETRICAL TERMS.

Radius,	*A*, *D*.
Sine,	*D*, *C*.
Cosine,	*D*, *H*.
Tangent,	*B*, *G*.
Cotangent,	*F*, *E*.
Secant,	*A*, *G*.
Cosecant,	*A*, *E*.
Versed sine,	*C*, *B*.
Coversine,	*H*, *F*.

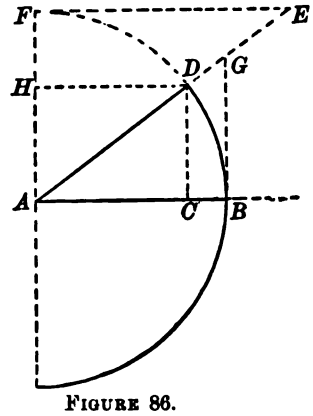

FIGURE 86.

REMARKS.—The angle from *B* to *D* is expressed in degrees, or the part of the circumference of a complete circle embraced between these points. Quantities above the plane *A*, *B*, are usually written positive, or plus (+). The same quantities below are written negative, or minus (—).

WHEEL GEARING.

It is questionable if the great mass of literature that exists respecting tooth gearing has much improved common practice. The teeth of wheels form a fertile field for geometrical demonstrations, but the difficulty is to apply these demonstrations to patterns and milling tools.

The Pitch of Teeth.—This term is usually employed to designate the distance between the centers of teeth and, consequently, their size. It is also employed in nearly the same sense to designate the number of teeth for each inch of a wheel's diameter.

In the first case it is called chordal, or circumferential pitch, and in the second case diametrical pitch. The latter is coming more into use because of its convenience, especially for small wheels.

The principal element of a wheel after its strength is determined is its diameter, and it seems natural to base the number of teeth on this dimension instead of the circumference, and in this way keep the diameters to even feet and inches, or binary divisions of these.

The precise distance between the centers of teeth is not a matter of importance, except to match existing patterns.

The following table shows the relation between diametrical and chordal pitch for wheels with from 3 to 20 teeth per inch of diameter:

Number of Teeth per Inch of Diameter	3	4	5	6	7	8	10	12	16	20
Chordal Pitch in Inches	1.04	.785	.628	.524	.449	.393	.314	.262	.196	.157
Corresponding Fractions of Inches, nearly	$1\frac{3}{64}$	$\frac{25}{32}$	$\frac{5}{8}$	$\frac{17}{32}$	$\frac{29}{64}$	$\frac{25}{64}$	$\frac{5}{16}$	$\frac{17}{64}$	$\frac{3}{16}$	$\frac{5}{32}$

REMARKS.—It is impossible to express the decimals above in exact fractions. The quantities in the lower line are as near as practicable.

NOTES, MEMORANDA.

The Diameter of Wheels.—For chord pitch, multiply the pitch in inches by the number of teeth and divide by 3.141 for the diameter in inches at the pitch circle. For the extreme diameter add five eighths of the pitch.

For diametrical pitch, divide the number of teeth by the pitch. When diametrical pitch is employed, a convenient rule for ascertaining the extreme diameter of a wheel is to set the figure 2 over the pitch. The fraction thus formed is the amount in inches to be added to the pitch diameter. For example: if the pitch is 4 per inch, then $\frac{2}{4}$, or one half inch, is added; if the pitch is 2, then $\frac{2}{2}$, or one inch, is added, and so on.

Dimensions for Cast-Iron Wheels.—The following dimensions for cast-iron wheels correspond with good practice, and are applicable to cast wheels generally. Referring to Figure 87, suppose the pitch *A* to be divided into sixteen parts,

O O = The pitch circle of the wheel.
A = Distance between centers = 16.
B = Distance between teeth = 9.
C = Thickness of teeth on pitch line = 7.
D = Distance from pitch line to tip = 5.
E = Distance below pitch line = 7.
F = Whole length of teeth = 12.
G = Thickness of wheel rims = 8.
Width of face, from three to four times the pitch = 48 to 64.

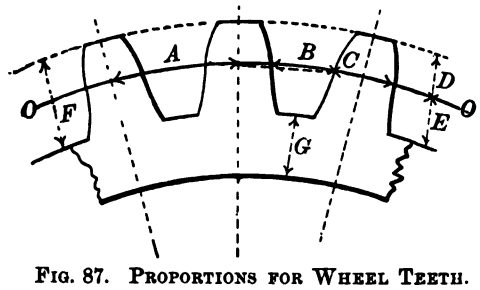

FIG. 87. PROPORTIONS FOR WHEEL TEETH.

Width for mortise wheels, add the pitch *A* to the width of cogs.
For cut wheels, *B* and *C* can be changed so the teeth will fill, or nearly so.
For the power transmitted by tooth gearing, see Chapter IV.

The Shape of Teeth.—Geometrical methods of generating the forms of wheel teeth are complicated even in their most simple form, and when demonstrated in a drawing cannot easily be transferred to work.

In practice there is really but one form of teeth that is correct, and of course no other form required. Involute teeth of a single curve and, indeed, all others, except what may be called those of "natural shape," can safely be omitted from the drawings and practice of any works.

In England, where wheel making seems to have reached the greatest perfection, draughtsmen and pattern makers employ usually a simple gear-wheel "chart," with a series of converging lines from which the main elements, including the radius of curves, are taken. Mr. John Walker, of Cleveland, Ohio, has published a similar, but more extensive, one for this purpose.

The best method of determining the curves of teeth is by means of templets, on the method shown in Figure 88, next page.

(CONTINUED.)

NOTES, MEMORANDA.

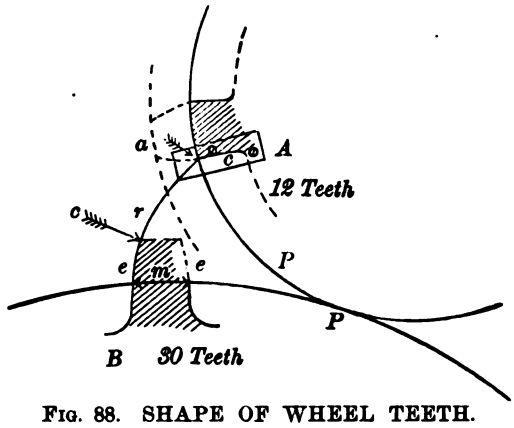

FIG. 88. SHAPE OF WHEEL TEETH.

In the diagram A represents a pinion of twelve teeth and B a wheel of thirty teeth. The full lines P, P, represent two templets corresponding to the pitch circles. By fastening a marking point on A at the point a and rolling the templets together, the point a follows the curve r, and the outer or point curves e, e, of the wheel B are described. By rolling right and left with the distance m between, the top of a tooth is formed. The corners at c should be slightly rounded. By transferring the marking point to the templet B the curves for A are determined the same way. The inner, or flank curves, can be determined in the same manner, as shown in the diagram, Figure 89.

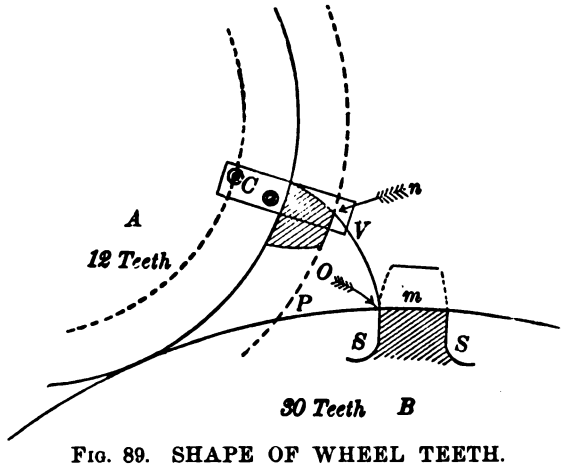

FIG. 89. SHAPE OF WHEEL TEETH.

The marker in this case, being fixed at the point of the tooth at n, describes the curve V, giving the shape at S, S, for the teeth of the wheel B. Reversing the operation gives the corresponding flank curves for the pinion A.

A skilled pattern maker will generally determine the flank curves and their fillets, without laying them out with templets, after the point curves and m are determined.

NOTES, MEMORANDA.

This may be called an unscientific method, but it is exact and practical; moreover, is applicable to all kinds of wheels, unless it be those of fine pitch, and these do not require patterns or even making cutters nowadays, the latter being furnished as an article of regular manufacture much cheaper and better than they can be made in an ordinary shop.

In respect to single-curve teeth there seems to be economy in the smaller number of cutters required for wheels of different sizes, but this is not the case where many wheels are cut, because there is the same expense for wear whether there be few or many cutters used.

Common Wrenches.—Among the various forms for wrenches, the one shown in Figure 90 is as symmetrical and as near true mathematical proportions as can be attained by any simple rule.

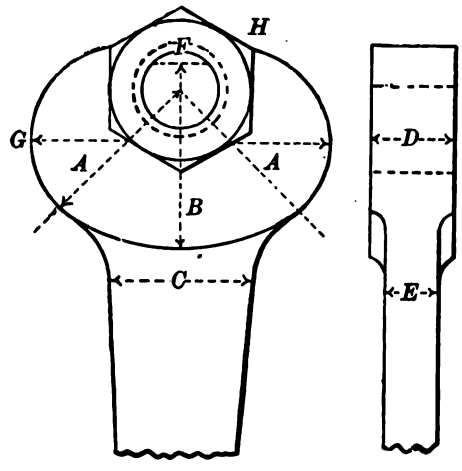

FIG. 90. COMMON WRENCHES.

To draw a wrench in this manner, make a circle touching the sides, or equal to the short diameter of the nut. From the center of the circle draw the lines *A*, *A*, at an angle of 45 degrees. Where these lines cut the circle are the points from which the jaws *G* are swept. The radius *B* for the back is generally taken from the center of the circle, but when the handle is made broad at *C*, so as to reinforce the back, a better form is attained by a longer radius for *B*. The present one is swept from the point *F*.

The thickness *D* should be three fourths the depth of the nut, and *E* one half as much. The length of the handle for small wrenches should be ten times the width between the jaws. The points of the saws at *H* should overlap a little.

This last example is supplied mainly as a suggestion to draughtsmen. Rules of the kind can be found for generating almost any implement or piece that is uniform.

NOTES, MEMORANDA.

CHAPTER XIX.

HEAT.

The Mechanical Equivalent of Heat.—This term is a unit employed to designate the amount of energy, or work, heat will perform, also as a measure of quantity for heat. It means the amount of heat required to raise one pound of water one degree in temperature, also the power required to raise 772 pounds one foot high, or 772 foot-pounds.

In this ratio heat can be converted to power and power to heat for computations when the loss by friction and waste is ascertainable. This measure for the effect of heat was established by Mr. Joule, of Manchester, England, but had been the subject of previous experiment by a number of scientific men. It is called "Joule's equivalent of heat." Further explanation is given in the next chapter.

Specific Heat.—The specific heat of a substance is its capacity to absorb heat, or, in other words, the amount of heat required to make a certain change in its temperature. For example: one unit of heat will raise one pound of water one degree, but it only requires one tenth of a unit of heat to raise a pound of iron one degree; hence the specific heat of water is 10. and that of iron 0.1.

Latent Heat.—This is a phenomenon of fusion. When a substance is raised in temperature to the melting point the sensible temperature then becomes fixed, and additional heat absorbed in the process of fusion is called latent, because not sensible or indicated. For example: when water is evaporated into steam, no further sensible change of temperature is possible without change of pressure or volume, still the absorption of heat may go on.

Fahrenheit Scale.—This scale for temperature is now employed in England and America. There are three different scales in use,—the Centigrade, or Celsius, the Réaumur, and Fahrenheit scales. The difference is indicated by the table below, ascending from the freezing point of water.

Fahrenheit	32	40	50	60	70	80	90	100	110
Centigrade	0	4.4	10.0	15.5	21.1	26.6	32.2	37.7	43.3
Réaumur	0	3.5	8.0	12.4	16.8	21.3	25.7	30.2	34.6

(CONTINUED.)

Fahrenheit	120	130	140	150	160	170	180	190	200	212
Centigrade	48.8	54.4	60.0	65.5	71.1	76.6	82.2	87.7	93.3	100
Réaumur	39.1	43.5	48.0	52.4	56.8	61.3	65.7	70.2	74.6	80

(CONTINUED.)

NOTES, MEMORANDA.

REMARKS.—The Réaumur and Centigrade scales, it will be observed, begin at the freezing point of water and reach 80 and 100 at the boiling point. Degrees of temperature not in the table can be rendered from one scale to the other by the following formulæ, the initial letters standing for the different scales.

$$F = \frac{9C}{5} + 32 \qquad F = \frac{9R}{4} + 32 \qquad C = \frac{5(F-32)}{9} \qquad R = \frac{4(F-32)}{9}$$

Melting Temperatures.—The following shows, approximately, the melting temperature, in degrees Fahrenheit, of metals in common use.

Wrought Iron.	Steel.	Gold.	Cast Iron.	Copper.	Silver.	Brass.	Zinc.	Lead.	Tin.
2912	2550	2200	2000	2000	1900	1800	700	600	500

Temperature of Steam.—At various pressures, including the atmosphere.

Pressure in Pounds per Square Inch .	1	5	10	20	30	40	50	60	70	80	100	125	150	200
Temperature in Degrees Fahrenheit .	102	163	194	228	251	268	281	293	303	312	328	350	358	382

MISCELLANEOUS TEMPERATURES IN DEGREES, FAHRENHEIT SCALE.

Bessemer converters	4000	Temperature of ignition	636
Puddling furnaces	3500	Temperature of the earth, mean	50
Melting cupola	3000	Temperature of the earth, torrid zone . .	75
Heat of common fire	1100	Temperature of the earth, polar region . .	20
Red heat of iron, in the light	1070	Temperature of the human blood	98
Red heat, in the dark	752	Temperature of the ocean	62

COMPRESSION OF AIR, TEMPERATURE AND VOLUME.

Degrees of temperature, Fahrenheit scale. Pressures in pounds per square inch.

Volume . .	100	.90	.80	.70	.60	.50	.40	.30	.20	.10	.05
Temperature.	32°	53.6°	79.0°	109°	146°	198°	245°	344°	489°	800°	1218°
Pressure . .	14.7	17.0	20.0	24.2	30.0	38.7	53.0	79.3	189	369	974

EXPANSION OF AIR, TEMPERATURE AND VOLUME.

Volume . .	1	1½	2	3	4	5	6	7	8	9	10
Temperature.	+32°	−39.6°	−89.4°	−146°	−181°	−205°	−223°	−238°	−250°	−259°	−268°
Pressure . .	14.7	8.57	5.57	3.15	2.11	1.54	1.19	0.96	0.78	0.67	0.52

NOTES, MEMORANDA.

RELATIVE HEAT-CONDUCTING POWER OF METALS.

Silver.	Copper.	Gold.	Tin.	Iron.	Steel.	Lead.	Platinum.	Bismuth.
100	80	98	42	40	40	20	40	6

Heating Buildings.—A common rule for heating buildings with steam pipes is to provide one square foot of pipe surface for each 100 cubic feet of space. No rule is of much use, however, because of the variations of external temperature and other conditions. The best way is to provide an excess of heating surface, and then control the pressure and temperature of the steam as required. High pressure always causes difficulty in maintaining apparatus. In very cold climates two square inches of pipe area to each cubic foot of space with a low pressure is preferable to less area and high pressure.

CHAPTER XX.

DYNAMICS.

Dynamics is that branch of mechanics that treats of forces combined with movement, and of power or work, consequently includes machine action of nearly every kind. The elements of dynamics are force, space, time, and mass. The functions are velocity, power, and work, or effect. The factors in dynamic computations and rules are quantity, volume, weight, time, space, and force. Power is a resultant of force and velocity. Work is a resultant of force, velocity, and time.

If either force or velocity are changed, power is changed accordingly. If either force, velocity, or space are changed, work is changed in the same proportion.

To alter the relations between force and velocity is the main function of machine gearing. Power cannot be increased or diminished in quantity by any kind of gearing, and when once generated, disappears only by friction or impact and their resultant,—heat.

The Conservation of Forces.—This important and fundamental principle in physical science—the conversion of heat into energy or power and the conversion of power into heat—ranks with the law of gravitation. Its discovery and proof furnished a new basis for computing and understanding steam and other heat engines operating by combustion and the expansion of gases.

It constitutes what may be called the "romance" of physical science, and is a most interesting study aside from exact knowledge or computations. It is present in all the grandest phenomena of nature as well as in the smallest manifestations of force and motion. The mighty earthquake and the tick of a clock are alike amenable to this great law, and without some conception of its nature and operation it is impossible to comprehend power and its application to useful purposes.

(CONTINUED.)

NOTES, MEMORANDA.

It is a knowledge of this principle in dynamics that prevents the construction of "perpetual motors," devices to save power, and other blunders such as are continually being committed by those not having a true conception of the laws of forces and their correlation with heat.

The qualifications of a constructing engineer can generally be judged from his acquaintance with, or at least his recognition of, the laws of forces. No one is likely to attempt the augmentation of power by mechanical contrivance, if heat is understood as the natural equivalent and cause of energy or power.

Momentum is the accumulated force of a body in motion. In computation it is equal to a counter force great enough to arrest the moving mass in one second's time. Momentum is found by multiplying the weight by the velocity in feet per minute. This gives foot-pounds.

Centrifugal Force.—This is applied to the tendency of revolving bodies to fly away from the center of motion. It may be called radial strain. It is computed by multiplying the weight by the radius and by the square of the number of revolutions per minute.

Impact.—This term applies to blows, generally by the momentum of bodies, as in the case of hammers, pile-drivers, and so on. It is the resultant of momentum, and is computed by the same rules.

Falling Velocity.—This important element in dynamics so often referred to in preceding cases is expressed by the well-known formula, $V = \sqrt{2gH}$, meaning that the velocity of a falling body in feet per second (V) is equal to the square root of the distance (H) in feet, multiplied by twice the constant for gravity (g), equal to 32.2.

This law, or rule, is seldom of use in so far as dealing with falling bodies, but is applicable to the flow of water or gases under pressure, and consequently to hydraulic, steam, and pneumatic apparatus, as has been pointed out in previous places. The following table shows the acceleration of velocity for falling bodies, the increment of speed being for each second 32.2 = g above.

FALLING VELOCITIES.

Time in Seconds . .	1	2	3	4	5	6	7	8	9	10
Distance in Feet each Second	16.1	48.3	80.5	112.7	144.9	177.1	209.3	241.5	273.3	305.9
Distance in the whole Time	16.1	64.4	144.9	256.7	402.5	579.6	788.9	1030.4	1304.1	1610
Velocity attained at each Second . . .	32.2	64.4	96.6	128.8	161.0	193.2	255.4	257.6	289.8	322

REMARKS.—The last line is made up by adding 32.2 (g) at the end of each second. The present and all other references to falling velocity do not take the resistance of air into account, but are assumed in vacuo.

NOTES, MEMORANDA.

NOTES, MEMORANDA.

SECTION SIXTH.

CHAPTER XXII.

WEIGHTS AND MEASURES.

Lineal Measure.—The metrology of all countries having authorized standards is based upon certain rods of metal specifically confirmed by law and carefully preserved from accident or loss.

All attempts to derive standards of length from natural sources have failed. Nothing in nature known to man is uniform or constant except time, and a century of experiment failed to derive a length standard from this source.

The meter of France was at first assumed to be one ten millionth part of a quadrant of meridian. This was found incapable of proof, and a metal rod was legalized by the French government the same as the English yard had been by Parliament.

The two standards of common use are the meter of 39.37 inches, or 3.28 feet, English measure, and the English yard of 36 inches. Both standards are legal in the United States.

The divisions of the meter are decimal, rational, and convenient. The divisions of the yard are irrational and inconvenient, not corresponding to common notation or system of any kind.

DECIMAL EQUIVALENTS OF ENGLISH LINEAL MEASURE.

Inches.	Feet.	Yards.	Rods.	Miles.	Meters.
1	.083	.0277	.005	.0000158	.0254
12	1	.333	.0606	.0001894	.3048
36	3	1	.182	.000568	.9144
198	16.5	5.5	1	.003125	5.0291
63,360	5280	1760	320	1	1609.315

METRICAL EQUIVALENTS OF FRENCH LINEAL MEASURE.

Ascending Scale.			Meter.	Descending Scale.		
Kilometer.	Hectometer.	Decameter.		Decimeter.	Centimeter.	Millimeter.
1	10	100	1000	10,000	100,000	1,000,000
0.1	1	10	100	1,000	10,000	100,000
0.01	0.1	1	10	100	1,000	10,000
0.001	0.01	0.1	1	10	100	1,000
0.0001	0.001	0.01	0.1	1	10	100
0.00001	0.0001	0.001	0.01	0.1	1	10
0.000001	0.00001	0.0001	0.001	0.01	0.1	1

NOTES, MEMORANDA.

by 2.45 for pounds in each foot of length. For two flanges it is common to allow the weight of one foot of the pipe's length.

COMMON WROUGHT-IRON PIPES.

Butt welded to 1¼ inches diameter, and lap welded for larger sizes.

DIMENSIONS IN INCHES.

Nominal Bore of Pipes	½	¾	1	1¼	1½	2	2½	3	3½	4	4½	5	6	7	8
Actual Bore of Pipes	0.62	0.82	1.04	1.38	1.61	2.06	2.46	3.06	3.54	4.02	4.50	5.04	6.00	7.02	7.92
Outside Diameter of Pipes	0.84	1.05	1.31	1.66	1.90	2.37	2.87	3.50	4.00	4.50	5.00	5.56	6.62	7.62	8.62
Thickness of Pipes in Inches . . .	0.10	0.11	0.13	0.14	0.14	0.15	0.20	0.21	0.22	0.23	0.24	0.25	0.28	0.30	0.32
Weight in Lbs. per Foot.	0.84	1.12	1.67	2.25	2.69	3.66	5.77	7.54	9.05	10.72	12.49	14.56	18.76	23.41	28.34

REMARKS.—The author has no information respecting the irregularity of the dimensions of iron pipes, as given above. They are taken from the trade list of a responsible firm, and approximate common practice.

WORKING LOAD FOR HEMP ROPES OF AVERAGE QUALITY.

Approximate Diameter . . .	½	⅝	¾	1	1⅛	1⅜	1⅝	2	2⅜	2⅝
Circumference in Inches . . .	1½	2	2½	3	3½	4	5	6	7	8
Working Load in Lbs. . . .	200	350	550	750	1000	1400	2000	3000	4000	6000

SAFE WORKING LOAD FOR IRON CHAINS.

Diameter of Iron in Inches .	¼	5/16	⅜	7/16	½	9/16	⅝	¾	⅞	1
Safe Load in Lbs.	1000	1500	2200	3000	4000	5000	6000	8000	12,000	15,000

NOTES, MEMORANDA.

work. The quantities given are averages.

PROPERTIES OF METALS.

Names of Materials.	Weight in Lbs. of a Cubic Foot.	Weight in Lbs. of a Cubic Inch.	Relative Weight. Water, 1000.	Tensile Strength in Lbs. per Sq. In. of Section.	Melting Point in Degrees Fahrenheit.
Wrought Iron, Average . . .	485.0	.277	7,700	56,000	3,000
Cast Iron, " . . .	450.0	.260	7,200	16,000	2,300
Cast Steel, " . . .	487.0	.280	7,800	100,000	2,500
Bessemer Steel, " . . .	489.0	.280	7,852	90,000	2,500
Copper, " . . .	547.0	.316	8,780	33,000	2,000
Brass, " . . .	500.0	.281	8,100	20,000	1,800
Tin, " . . .	455.0	.210	7,290	5,600	446
Lead, " . . .	709.0	.410	11,352	2,000	600
Silver, " . . .	653.0	.378	10,474	30,000	1,800

WEIGHT OF VARIOUS SUBSTANCES.

Name of Substance.	Weight of 1 Cubic Foot in Lbs.	Name of Substance.	Weight of 1 Cubic Foot in Lbs.	Name of Substance.	Weight of 1 Cubic Foot in Lbs.
Brick-work . . .	100 to 120	Sandstone . . .	135 to 150	Pine, White . .	27 to 30
Clay	120 to 130	Water, Fresh . .	62.3 to 62.5	Pine, Yellow . .	35 to 45
Coal	80 to 82	Water, Salt . .	63 to 65	Air	.08 to .080
Coke.	45 to 62	Alcohol	50 to 60	Steam	.05 to .055
Earth, Loose . .	76 to 90	Oils, Various . .	54 to 57	Snow	5.2 to 5.5
Earth, Rammed .	100 to 120	Acid, Sulphuric.	114.116	Coal Gas	.035 to .036
Granite	160 to 165	Oak Wood . . .	42 to 53	Carbonic Acid .	.122 to .123

NOTES, MEMORANDA.

Width in Inches.	Thickness of Bars in Inches.									
	3/16	1/4	5/16	3/8	7/16	1/2	5/8	3/4	7/8	1
1	0.63	0.83	1.04	1.25	1.46	1.67	2.08	2.50	2.92	3.34
1 1/4	0.78	1.04	1.30	1.56	1.82	2.08	2.60	3.13	3.65	4.17
1 1/2	0.94	1.25	1.56	1.87	2.19	2.50	3.13	3.75	4.38	5.00
1 3/4	1.10	1.46	1.82	2.19	2.55	2.92	3.65	4.38	5.11	5.84
2	1.25	1.67	2.08	2.50	2.92	3.34	4.17	5.01	5.86	6.68
2 1/4	1.41	1.87	2.34	2.81	3.28	3.76	4.69	5.63	6.57	7.52
2 1/2	1.56	2.08	2.60	3.13	3.65	4.17	5.21	6.26	7.30	8.35
3	1.88	2.50	3.13	3.75	4.38	5.01	6.26	7.51	8.76	10.02
3 1/2	2.19	2.92	3.65	4.38	5.11	5.84	7.30	8.76	10.23	11.69
4	2.50	3.34	4.17	5.00	5.84	6.68	8.35	10.02	11.69	13.36
4 1/2	2.85	3.75	4.69	5.63	6.57	7.51	9.39	11.27	13.15	15.03
5	3.13	4.17	5.21	6.26	7.30	8.35	10.44	12.52	14.61	16.70
6	3.75	5.01	6.25	7.51	8.76	10.02	12.53	15.03	17.53	20.05

Remarks.—Square bars or sizes not included in the table are easily found by multiplying or dividing the sizes given. For instance, 6 × 1 inch, multiplied by 6 = 6 × 6 = or 120.03 pounds.

Weight of other Metals.—The following multipliers can be used for other metals.

.94	1.02	1.15	1.48	1.05
Cast iron.	Steel.	Copper.	Lead.	Brass.

NOTES, MEMORANDA.

Cast Iron.—Cold-blast iron is one fourth stronger than hot-blast iron.

Cast iron is not injured by remelting up to eight or ten times. Soft iron stands more remelting than hard iron.

The tenacity of cast iron is about one third that of wrought iron, and should not be relied upon for more than one sixth as much tensile strain.

American cast iron is usually stronger than English brands, and an allowance of twelve to fifteen per cent. can be made in sections.

Malleable cast iron is produced by annealing common castings packed in boxes, with hematite ore or black oxide of iron. The term of heating is from seven to fourteen days.

Wrought iron is made by puddling cast iron. The process consists in melting and exposure to high heat, the mass being stirred or puddled until nearly all the carbon is burned out. Pure iron contains no carbon.

Shrinkage of Castings.—Iron castings shrink from one sixteenth to one eighth inch per foot. Thin sections shrink less than thick ones. Brass shrinks three sixteenths of an inch; zinc, five sixteenths of an inch; lead, five sixteenths of an inch; and copper three sixteenths of an inch per foot.

ELECTRICAL-CONDUCTING POWER OF METALS.

Gold.	Platinum.	Silver.	Copper.	Iron.	Steel.	Tin.	Lead.
100	98	97	89	37	36	30	8

NOTES, MEMORANDA.

Spring Steel.—This is made from blister steel, the bars being heated to a low heat and then drawn by hammering or rolling into smaller rods or bars of spring steel. It is stiff, elastic, and especially suited for springs of all kinds.

Shear Steel.—This is made by welding bars of blister steel into faggots and then hammering or rolling into shapes. The operation has to be repeated several times to produce the finer qualities. It is then known as half shear, shear, and double shear. It is sometimes piled and welded three times.

Cast Steel.—This name is applied to steel produced by melting bars of blister steel that have been broken up into small pieces and melted in crucibles. The steel after melting is poured into iron moulds, forming ingots that are afterwards hammered or rolled into plates or bars. The melting and casting produces homogeneity not attainable by other processes, and all the finer kinds of steel are treated in this way.

Bessemer Steel.—This is made direct from pig iron, which is first melted in a cupola, then run into a converter. A current of air is forced through the metal, burning out the carbon and raising the temperature to about 3000°. The desired amount of carbon is then restored by adding "spiegeleisen," a kind of metal rich in carbon. The charge is then run into iron moulds, and is ready for hammering or rolling.

Siemens-Martin Steel.—This is produced in an open-hearth regenerative furnace, by first melting a quantity of pig iron to which is added steel scrap. Limestone and rich iron ore are also added, and a chemical change takes place, the extra amount of carbon escaping. After treatment the molten steel is poured into ingots or castings ready for hammering or rolling.

NOTES MEMORANDA

balanced by equal reciprocating weight moving coincidently in the opposite direction in the same plane.

It is common to apply counterbalances to the cranks of steam engines, saw mills, and other cases of the kind for convenience, so the machinery will stand in any position, and to avoid vibration in the plane of reciprocation. This counterbalances in one direction only, and merely changes vibration from one plane to another.

This can be understood by referring to Figure 91. If the connecting rod *a* and its attachments weigh 200 pounds, then an equal weight applied at *B* will balance *A* in a vertical direction; but as *A* has but little weight moving in the other plane, from *A* to *B*, the counterweight at *B* would be unbalanced, and the vibration would only be transferred from *C*, *D*, to *A*, *B*. The difference would be that so much of *A* as has its center of gravity on the crank pin, or, in other words, so much as is rotary, would balance an equal part of a weight applied at *B*.

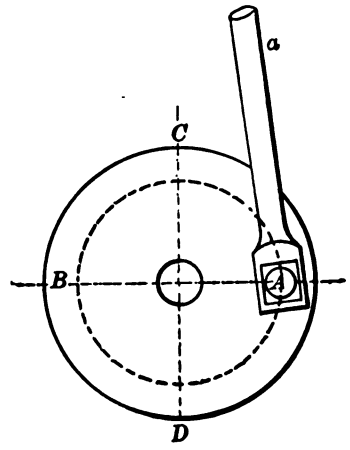

FIGURE 91.

The subject, therefore, resolves itself into a problem of attachments for the machinery and the direction in which vibration can be best resisted. The strains can be vertical or horizontal, or may be equally divided between the two. In the case of earth foundations the strains should be vertical, for floors horizontal, and when the position and method of erection is not known, the best that can be done is to apply a "half balance,"—that is, a counterweight equal to one half the reciprocating weight less so much of the latter as is rotary, or has its center of gravity on the crank pin, the relation of the two weights being of course as their distance from the center.

The intricate calculations respecting counterbalances found in text-books have but little value in practice, because they cannot include the various methods of erection and other circumstances that vary in each case.

METRICAL WEIGHTS.

In the metrical system the kilogramme, nearly equal to 2.2 pounds, or 2 pounds 3.28 ounces, is the unit, divided as follows:

DESCENDING SCALE.

Kilogramme, 1	Hectogramme, .1	Decagramme, .01	Gramme, .001
One.	One tenth.	One hundredth.	One thousandth.

ASCENDING SCALE.

Myriagramme, 10	Quintal, 100	Millier, 1000
Ten kilogrammes.	One hundred kilos.	One thousand kilos.

To reduce pounds to kilogrammes, divide by 2.2, or, for greater exactness, by 2.204.
To reduce kilogrammes to pounds, multiply by the same numbers.

FRACTIONS OF AN INCH AND DECIMAL EQUIVALENTS.

Fractions of an Inch .	1/16	1/8	3/16	1/4	5/16	3/8	7/16	1/2	9/16	5/8	11/16	3/4	13/16	7/8	15/16	1
Decimal Equivalents.	.062	.125	.187	.250	.312	.375	.437	.500	.562	.625	.687	.750	.812	.875	.937	1.0

(CONTINUED.)

32d Parts of an Inch .	1	3	5	7	9	11	13	15	17	19	21	23	25	27	29	31
Decimal Equivalents.	.031	.093	.156	.218	.281	.343	.406	.468	.531	.593	.656	.718	.781	.843	.906	.968

INCHES CONVERTED TO DECIMALS OF A FOOT.

Inches	1/8	1/4	3/8	1/2	5/8	3/4	7/8	1
Feet	.010	.020	.031	.041	.052	.062	.072	.083

(CONTINUED.)

Inches	1	2	3	4	5	6	7	8	9	10	11	12
Feet	.083	.166	.250	.333	.416	.500	.583	.666	.750	.833	.916	1.0

KNOTS AND STATUTE MILES.

Knots . . .	1	2	3	4	5	6	7	8	9	10	11	12	13
Miles . . .	1.15	2.30	3.45	4.60	5.75	6.91	8.06	9.21	10.36	11.52	12.67	13.82	14.97

(CONTINUED.)

Knots	14	15	16	17	18	19	20	21	22	23	24	25
Miles	16.12	17.28	18.43	19.58	20.73	21.88	23.04	24.19	25.34	26.49	27.64	28.80

NOTES, MEMORANDA.

SCREWS, BOLTS, AND NUTS.

The exact standards for screws, bolts, and nuts have reference to their extensive manufacture rather than to practice in shops. The dimensions given here, being in eighths and sixteenths, vary in some respects from the common standards, which are usually given in decimal notation.

DIMENSIONS IN INCHES.

DIAM. OF SCREWS.	1/4	5/16	3/8	7/16	1/2	9/16	5/8	3/4	7/8	1	1 1/8	1 1/4	1 1/2	1 3/4	2
Angular Threads, per Inch . . .	20	18	16	14	13	12	11	10	9	8	7	7	6	5	4 1/2
Square Threads, per Inch . . .	10	10	9	8	8	7	7	6	6	5	5	4	3	3	2 1/2
Hexagon Nuts, Short Diam. .	1/2	9/16	11/16	3/4	7/8	1	1 1/16	1 1/4	1 7/16	1 5/8	1 3/4	2	2 3/8	2 3/4	3 1/8
Hexagon Nuts, Long Diam. .	9/16	11/16	3/4	15/16	1	1 1/8	1 1/4	1 7/16	1 5/8	1 7/8	2 1/8	2 5/16	2 3/4	3 3/16	3 5/8
Thickness of Finished Nuts . .	1/4	5/16	3/8	7/16	1/2	1/2	9/16	11/16	13/16	15/16	1 1/16	1 1/8	1 3/8	1 5/8	1 7/8
Width of Square Heads	3/8	9/16	5/8	3/4	13/16	7/8	1	1 1/8	1 1/4	1 1/2	1 3/4	1 7/8	2 3/8	2 3/4	3
Thickness of Heads	1/4	1/4	5/16	3/8	7/16	1/2	1/2	5/8	5/8	3/4	7/8	1	1 1/8	1 1/4	1 1/2
Pipe Threads, per Inch	19	. .	19	. .	14	. .	. .	14	. .	11	. .	11	11	11	11

REMARKS.—The English and American standards for the pitch of angular threads are the same, except for half inch diameter, the English pitch being 12 instead of 13. There is no standard for the pitch of square threads. These are varied in practice to meet the requirements in each case. The pitch given is an average one.

SIZE OF WOOD AND MACHINE SCREWS.

The following table shows the diameter of wood screws and machine screws in decimals and fractions of an inch. The diameter of the heads of machine screws is double that of the stem.

Numbers of Screws	8	9	10	11	12	13	14	15	16	17	18	19	20
Diameter in Decimals . . .	.162	.175	.188	.201	.215	.228	.241	.255	.268	.281	.293	.308	.321
Nearest Fractions of an Inch	5/32	11/64	3/16	13/64	7/32	15/64	1/4	1/4	17/64	9/32	19/64	5/16	21/64

WEIGHT OF IRON CASTINGS.

A cubic inch of cast iron weighs .26 pound. Multiply the number of cubic inches by .26 for pounds. It is common to divide cubic inches by 4 for pounds. This gives an error of four per cent. When the contents are taken from drawings or patterns, divide cubic inches by 4 and add eight per cent. for pounds.

Patterns for castings when made of common pine weigh one fourteenth as much as the castings.

NOTES, MEMORANDA.

AREAS OF CIRCLES.

Diameter.	Fractions of Inches.								Diameter.
	.0	.⅛	.¼	.⅜	.½	.⅝	.¾	.⅞	
0	.0	.012	.049	.110	.196	.306	.441	.601	0
1	.785	.994	1.227	1.484	1.767	2.073	2.405	2.761	1
2	3.141	3.546	3.976	4.430	4.908	5.411	5.939	6.491	2
3	7.068	7.669	8.295	8.946	9.621	10.32	11.04	11.79	3
4	12.56	13.36	14.18	15.03	15.90	16.80	17.72	18.66	4
5	19.63	20.62	21.64	22.69	23.75	24.85	25.96	27.10	5
6	28.27	29.46	30.67	31.91	33.18	34.47	35.78	37.12	6
7	38.48	39.87	41.28	42.71	44.17	45.66	47.17	48.70	7
8	50.26	51.84	53.45	55.08	56.74	58.42	60.13	61.86	8
9	63.61	65.39	67.20	69.02	70.88	72.75	74.66	76.58	9
10	78.54	80.51	82.51	84.54	86.59	88.66	90.76	92.88	10
11	95.03	97.20	99.40	101.6	103.8	106.1	108.4	110.7	11
12	113.0	115.4	117.8	120.2	122.7	125.1	127.6	130.1	12
13	132.7	135.2	137.8	140.5	143.1	145.8	148.4	151.2	13
14	153.9	156.6	159.4	162.2	165.1	167.9	170.8	173.7	14
15	176.7	179.6	182.6	185.6	188.6	191.7	194.8	197.9	15
16	201.0	204.2	207.3	210.5	213.8	217.0	220.3	223.6	16
17	226.9	230.3	233.7	237.1	240.5	243.9	247.4	250.9	17
18	254.4	258.0	261.5	265.1	268.8	272.4	276.1	279.8	18
19	283.5	287.2	291.0	294.8	298.6	302.4	306.3	310.2	19
20	314.1	318.1	322.0	326.0	330.0	334.1	338.1	342.2	20
21	346.3	350.4	354.6	358.8	363.0	367.2	371.5	375.8	21
22	380.1	384.4	388.8	393.2	397.6	402.0	406.4	410.9	22
23	415.4	420.0	424.5	429.1	433.7	438.3	443.0	447.6	23
24	452.3	457.1	461.8	466.6	471.4	476.2	481.1	485.9	24
25	490.8	495.7	500.7	505.7	510.7	515.7	520.7	525.8	25
26	530.9	536.0	541.1	546.3	551.5	556.7	562.0	567.2	26
27	572.5	577.8	583.2	588.5	593.9	599.3	604.8	610.2	27
28	615.7	621.2	626.7	632.3	637.9	643.5	649.1	654.8	28
29	660.5	666.2	671.9	677.7	683.4	689.2	695.1	700.9	29
30	706.8	712.7	718.6	724.6	730.6	736.6	742.6	748.6	30
31	754.8	760.9	767.0	773.1	779.3	785.5	791.7	798.0	31
32	804.2	810.5	816.9	823.2	829.6	836.0	842.4	848.8	32
33	855.3	861.8	868.3	874.8	881.4	888.0	894.6	901.3	33
34	907.9	914.6	921.3	928.1	934.8	941.6	948.4	955.3	34
35	962.1	969.0	975.9	982.8	989.8	996.8	1003.8	1010.8	35
36	1017.9	1025.0	1032.1	1039.2	1046.4	1053.5	1060.7	1068.0	36
37	1075.2	1082.5	1089.8	1097.1	1104.5	1111.8	1119.2	1126.7	37
38	1134.1	1141.6	1149.1	1156.6	1164.2	1171.7	1179.3	1186.9	38
39	1194.6	1202.3	1210.0	1217.7	1225.4	1233.2	1241.0	1248.8	39
40	1256.6	1264.5	1272.4	1280.3	1288.3	1296.2	1304.2	1312.2	40
41	1320.3	1328.3	1336.4	1344.5	1352.7	1360.8	1369.0	1377.2	41
42	1385.4	1393.7	1402.0	1410.3	1418.6	1427.0	1435.4	1443.8	42

NOTES, MEMORANDA.

AREAS OF CIRCLES—Continued.

Diameter.	Fractions of Inches.								Diameter.
	.0	.⅛	.¼	.⅜	.½	.⅝	.¾	.⅞	
43	1452.2	1460.7	1469.1	1477.6	1486.2	1494.7	1503.3	1511.9	43
44	1520.5	1529.2	1537.9	1546.6	1555.3	1564.0	1572.8	1581.6	44
45	1590.4	1599.3	1608.2	1617.0	1626.0	1634.9	1643.9	1652.9	45
46	1661.9	1671.0	1680.0	1689.1	1698.2	1707.4	1716.5	1725.7	46
47	1734.9	1744.2	1753.5	1762.7	1772.1	1781.4	1790.8	1800.1	47
48	1809.6	1819.0	1828.5	1837.9	1847.5	1857.0	1866.6	1876.1	48
49	1885.7	1895.4	1905.0	1914.7	1924.4	1934.2	1943.9	1953.7	49
50	1963.5	1973.3	1983.2	1993.1	2003.0	2012.9	2022.8	2032.8	50
51	2042.8	2052.9	2062.9	2073.0	2083.1	2093.2	2103.4	2113.5	51
52	2123.7	2133.9	2144.2	2154.5	2164.8	2175.1	2185.4	2195.8	52
53	2206.2	2216.6	2227.1	2237.5	2248.0	2258.5	2269.1	2279.6	53
54	2290.2	2300.8	2311.5	2322.1	2332.8	2343.5	2354.3	2365.0	54
55	2375.8	2386.6	2397.5	2408.3	2419.2	2430.2	2441.1	2452.0	55
56	2463.0	2474.0	2485.1	2496.1	2507.2	2518.3	2529.4	2540.6	56
57	2551.8	2563.0	2574.2	2585.5	2596.7	2608.0	2619.4	2630.7	57
58	2642.1	2653.5	2664.9	2676.4	2687.8	2699.3	2710.9	2722.4	58
59	2734.0	2745.6	2757.2	2768.8	2780.5	2792.2	2803.9	2815.7	59
60	2827.4	2839.2	2851.1	2862.9	2874.8	2886.7	2898.6	2910.5	60
61	2922.5	2934.5	2946.5	2958.5	2970.6	2982.7	2994.8	3006.9	61
62	3019.1	3031.3	3043.5	3055.7	3068.0	3080.3	3092.6	3104.9	62
63	3117.3	3129.6	3142.0	3154.5	3166.9	3179.4	3191.9	3204.4	63
64	3217.0	3229.6	3242.2	3254.8	3267.5	3280.1	3292.8	3305.6	64
65	3318.3	3331.1	3343.9	3356.7	3369.6	3382.4	3395.3	3408.3	65
66	3421.2	3434.2	3447.2	3460.2	3473.2	3486.3	3499.4	3512.5	66
67	3525.7	3538.8	3552.0	3565.2	3578.5	3591.7	3605.0	3618.4	67
68	3631.7	3645.1	3658.4	3671.9	3685.3	3698.8	3712.2	3725.8	68
69	3739.3	3752.8	3766.4	3780.0	3793.7	3807.3	3821.0	3834.7	69
70	3848.5	3862.2	3876.0	3889.8	3903.6	3917.5	3931.4	3945.3	70
71	3959.2	3973.2	3987.1	4001.1	4015.2	4029.2	4043.3	4057.4	71
72	4071.5	4085.7	4099.8	4114.0	4128.3	4142.5	4156.8	4171.1	72
73	4185.4	4199.7	4214.1	4228.5	4242.9	4257.4	4271.8	4286.3	73
74	4300.9	4315.4	4330.0	4344.6	4359.2	4373.8	4388.5	4403.2	74
75	4417.9	4432.6	4447.4	4462.2	4477.0	4491.8	4506.7	4521.6	75
76	4536.5	4551.4	4566.4	4581.3	4596.4	4611.4	4626.4	4641.5	76
77	4656.6	4671.8	4686.9	4702.1	4717.3	4732.5	4747.8	4763.1	77
78	4778.4	4793.7	4809.1	4824.4	4839.8	4855.3	4870.7	4886.2	78
79	4901.7	4917.2	4932.8	4948.3	4963.9	4979.5	4995.2	5010.9	79
80	5026.6	5042.3	5058.0	5073.8	5089.6	5105.4	5121.2	5137.1	80
81	5153.0	5168.9	5184.9	5200.8	5216.8	5232.8	5248.9	5264.9	81
82	5281.0	5297.1	5313.3	5329.4	5345.6	5361.8	5378.1	5394.3	82
83	5410.6	5426.9	5443.3	5459.6	5476.0	5492.4	5508.8	5525.3	83
84	5541.8	5558.3	5574.8	5591.4	5608.0	5624.6	5641.2	5657.8	84
85	5674.5	5691.2	5707.9	5724.7	5741.5	5758.3	5775.1	5791.9	85
86	5808.8	5825.7	5842.6	5859.6	5876.6	5893.6	5910.6	5927.6	86

NOTES, MEMORANDA.

AREAS OF CIRCLES—Continued.

Diameter.	Fractions of Inches.								Diameter.
	.0	.⅛	.¼	.⅜	.½	.⅝	.¾	.⅞	
87	5944.7	5961.8	5978.9	5996.1	6013.2	6030.4	6047.6	6064.9	87
88	6082.1	6099.4	6116.7	6134.1	6151.4	6169.8	6186.3	6203.7	88
89	6221.2	6238.6	6256.2	6273.7	6291.3	6308.8	6326.4	6344.1	89
90	6361.7	6379.4	6397.1	6414.9	6432.6	6450.4	6468.2	6486.0	90
91	6503.9	6521.8	6539.7	6557.6	6575.6	6593.5	6611.5	6629.6	91
92	6647.6	6665.7	6683.8	6701.9	6720.1	6738.3	6756.5	6774.7	92
93	6792.9	6811.2	6829.5	6847.8	6866.2	6884.5	6902.9	6921.3	93
94	6939.8	6958.3	6976.8	6995.3	7013.8	7032.4	7051.0	7069.6	94
95	7088.2	7106.9	7125.6	7144.3	7163.0	7181.8	7200.6	7219.4	95
96	7238.2	7257.1	7276.0	7294.9	7313.8	7332.8	7351.8	7370.8	96
97	7389.8	7408.9	7428.0	7447.1	7466.2	7485.4	7504.5	7523.8	97
98	7543.0	7562.2	7581.5	7600.8	7620.1	7639.5	7658.9	7678.3	98
99	7697.7	7717.2	7736.6	7756.1	7775.7	7795.2	7814.8	7834.4	99

CIRCUMFERENCES OF CIRCLES.

Diameter.	Fractions of Inches.								Diameter.
	.0	.⅛	.¼	.⅜	.½	.⅝	.¾	.⅞	
0	.0	.392	.785	1.178	1.570	1.963	2.356	2.748	0
1	3.141	3.534	3.927	4.319	4.712	5.105	5.497	5.890	1
2	6.283	6.675	7.068	7.461	7.854	8.246	8.639	9.032	2
3	9.424	9.817	10.21	10.60	10.99	11.38	11.78	12.17	3
4	12.56	12.95	13.35	13.74	14.13	14.52	14.92	15.31	4
5	15.70	16.10	16.49	16.88	17.27	17.67	18.06	18.45	5
6	18.84	19.24	19.63	20.02	20.42	20.81	21.20	21.59	6
7	21.99	22.38	22.77	23.16	23.56	23.95	24.34	24.74	7
8	25.13	25.52	25.91	26.31	26.70	27.09	27.48	27.88	8
9	28.27	28.66	29.05	29.45	29.84	30.23	30.63	31.02	9
10	31.41	31.80	32.20	32.59	32.98	33.37	33.77	34.16	10
11	34.55	34.95	35.34	35.73	36.12	36.52	36.91	37.30	11
12	37.69	38.09	38.48	38.87	39.27	39.66	40.05	40.44	12
13	40.84	41.23	41.62	42.01	42.41	42.80	43.19	43.58	13
14	43.98	44.37	44.76	45.16	45.55	45.94	46.33	46.73	14
15	47.12	47.51	47.90	48.30	48.69	49.08	49.48	49.87	15
16	50.26	50.65	51.05	51.44	51.83	52.22	52.62	53.01	16
17	53.40	53.79	54.19	54.58	54.97	55.37	55.76	56.15	17
18	56.54	56.94	57.33	57.72	58.11	58.51	58.90	59.29	18
19	59.69	60.08	60.47	60.86	61.26	61.65	62.04	62.43	19
20	62.83	63.22	63.61	64.01	64.40	64.79	65.13	65.58	20

NOTES, MEMORANDA.

CIRCUMFERENCES OF CIRCLES—Continued.

Diameter.	Fractions of Inches.								Diameter.
	.0	.1/8	.1/4	.3/8	.1/2	.5/8	.3/4	.7/8	
21	65.97	66.36	66.75	67.15	67.54	67.93	68.32	68.72	**21**
22	69.11	69.50	69.90	70.29	70.68	71.07	71.47	71.86	**22**
23	72.25	72.64	73.04	73.43	73.82	74.22	74.61	75.00	**23**
24	75.39	75.79	76.18	76.57	76.96	77.36	77.75	78.14	**24**
25	78.54	78.93	79.32	79.71	80.10	80.50	80.89	81.28	**25**
26	81.68	82.07	82.46	82.85	83.25	83.64	84.03	84.43	**26**
27	84.82	85.21	85.60	86.00	86.39	86.78	87.17	87.57	**27**
28	87.96	88.35	88.75	89.14	89.53	89.92	90.32	90.71	**28**
29	91.10	91.49	91.89	92.28	92.67	93.06	93.46	93.85	**29**
30	94.24	94.64	95.03	95.42	95.81	96.21	96.60	96.99	**30**
31	97.4	97.8	98.2	98.6	99.0	99.4	99.7	100.1	**31**
32	100.5	100.9	101.3	101.7	102.1	102.5	102.9	103.3	**32**
33	103.7	104.1	104.5	104.9	105.2	105.6	106.0	106.4	**33**
34	106.8	107.2	107.6	108.0	108.4	108.8	109.2	109.6	**34**
35	110.0	110.3	110.7	111.1	111.5	111.9	112.3	112.7	**35**
36	113.1	113.5	113.9	114.3	114.7	115.1	115.5	115.8	**36**
37	116.2	116.6	117.0	117.4	117.8	118.2	118.6	119.0	**37**
38	119.4	119.8	120.2	120.6	121.0	121.3	121.7	122.1	**38**
39	122.5	122.9	123.3	123.7	124.1	124.5	124.9	125.3	**39**
40	125.7	126.1	126.4	126.8	127.2	127.6	128.0	128.4	**40**
41	128.8	129.2	129.6	130.0	130.4	130.8	131.2	131.6	**41**
42	131.9	132.3	132.7	133.1	133.5	133.9	134.3	134.7	**42**
43	135.1	135.5	135.9	136.3	136.7	137.1	137.4	137.8	**43**
44	138.2	138.6	139.0	139.4	139.8	140.2	140.6	141.0	**44**
45	141.4	141.8	142.2	142.6	142.9	143.3	143.7	144.1	**45**
46	144.5	144.9	145.3	145.7	146.1	146.5	146.9	147.3	**46**
47	147.7	148.0	148.4	148.8	149.2	149.6	150.0	150.4	**47**
48	150.8	151.2	151.6	152.0	152.4	152.8	153.2	153.5	**48**
49	153.9	154.3	154.7	155.1	155.5	155.9	156.3	156.7	**49**
50	157.1	157.5	157.9	158.3	158.7	159.0	159.4	159.8	**50**
51	160.2	160.6	161.0	161.4	161.8	162.2	162.6	163.0	**51**
52	163.4	163.8	164.1	164.5	164.9	165.3	165.7	166.1	**52**
53	166.5	166.9	167.3	167.7	168.1	168.5	168.9	169.3	**53**
54	169.6	170.0	170.4	170.8	171.2	171.6	172.0	172.4	**54**
55	172.8	173.2	173.6	174.0	174.4	174.8	175.1	175.5	**55**
56	175.9	176.3	176.7	177.1	177.5	177.9	178.3	178.7	**56**
57	179.1	179.5	179.9	180.2	180.6	181.0	181.4	181.8	**57**
58	182.2	182.6	183.0	183.4	183.8	184.2	184.6	185.0	**58**
59	185.4	185.7	186.1	186.5	186.9	187.3	187.7	188.1	**59**
60	188.5	188.9	189.3	189.7	190.1	190.5	190.9	191.2	**60**
61	191.6	192.0	192.4	192.8	193.2	193.6	194.0	194.4	**61**
62	194.8	195.2	195.6	196.0	196.4	196.7	197.1	197.5	**62**
63	197.9	198.3	198.7	199.1	199.5	199.9	200.3	200.7	**63**
64	201.1	201.5	201.8	202.2	202.6	203.0	203.4	203.8	**64**

NOTES. MEMORANDA.

CIRCUMFERENCES OF CIRCLES—Continued.

Diameter.	.0	Fractions of Inches.							Diameter.
		.1/8	.1/4	.3/8	.1/2	.5/8	.3/4	.7/8	
65	204.2	204.6	205.0	205.4	205.8	206.2	206.6	207.0	65
66	207.3	207.7	208.1	208.5	208.9	209.3	209.7	210.1	66
67	210.5	210.9	211.3	211.7	212.1	212.5	212.8	213.2	67
68	213.6	214.0	214.4	214.8	215.2	215.6	216.0	216.4	68
69	216.8	217.2	217.6	217.9	218.3	218.7	219.1	219.5	69
70	219.9	220.3	220.7	221.1	221.5	221.9	222.3	222.7	70
71	223.1	223.4	223.8	224.2	224.6	225.0	225.4	225.8	71
72	226.2	226.6	227.0	227.4	227.8	228.2	228.6	228.9	72
73	229.3	229.7	230.1	230.5	230.9	231.3	231.7	232.1	73
74	232.5	232.9	233.3	233.7	234.0	234.4	234.8	235.2	74
75	235.6	236.0	236.4	236.8	237.2	237.6	238.0	238.4	75
76	238.8	239.2	239.5	239.9	240.3	240.7	241.1	241.5	76
77	241.9	242.3	242.7	243.1	243.5	243.9	244.3	244.7	77
78	245.0	245.4	245.8	246.2	246.6	247.0	247.4	247.8	78
79	248.2	248.6	249.0	249.4	249.8	250.1	250.5	250.9	79
80	251.3	251.7	252.1	252.5	252.9	253.3	253.7	254.1	80
81	254.5	254.9	255.3	255.6	256.0	256.4	256.8	257.2	81
82	257.6	258.0	258.4	258.8	259.2	259.6	260.0	260.4	82
83	260.8	261.1	261.5	261.9	262.3	262.7	263.1	263.5	83
84	263.9	264.3	264.7	265.1	265.5	265.9	266.3	266.6	84
85	267.0	267.4	267.8	268.2	268.6	269.0	269.4	269.8	85
86	270.2	270.6	271.0	271.4	271.7	272.1	272.5	272.9	86
87	273.3	273.7	274.1	274.5	274.9	275.3	275.7	276.1	87
88	276.3	276.9	277.2	277.6	278.0	278.4	278.8	279.2	88
89	279.6	280.0	280.4	280.8	281.2	281.6	282.0	282.4	89
90	282.7	283.1	283.5	283.9	284.3	284.7	285.1	285.5	90
91	285.9	286.3	286.7	287.1	287.5	287.9	288.2	288.6	91
92	289.0	289.4	289.8	290.2	290.6	291.0	291.4	291.8	92
93	292.2	292.6	293.0	293.3	293.7	294.1	294.5	294.9	93
94	295.3	295.7	296.1	296.5	296.9	297.3	297.7	298.1	94
95	298.5	298.8	299.2	299.6	300.0	300.4	300.8	301.2	95
96	301.6	302.0	302.4	302.8	303.2	303.6	303.9	304.3	96
97	304.7	305.1	305.5	305.9	306.3	306.7	307.1	307.5	97
98	307.8	308.2	308.7	309.1	309.4	309.8	310.2	310.6	98
99	311.0	311.4	311.8	312.2	312.6	313.0	313.4	313.8	99

REMARKS.—In the foregoing tables the diameters may be assumed in inches, or in feet and inches. For example, instead of 60 inches the diameter can be taken as 5 feet, the numbers in the table representing feet or inches accordingly.

NOTES, MEMORANDA.

SQUARE ROOTS AND CUBE ROOTS OF NUMBERS FROM 1 TO 501.

No.	Square Root.	Cube Root.	No.	Square Root.	Cube Root.	No.	Square Root.	Cube Root.
1	1.0000	1.0000	41	6.4031	3.4482	81	9.0000	4.3267
2	1.4142	1.2599	42	6.4807	3.4760	82	9.0553	4.3444
3	1.7320	1.4422	43	6.5574	3.5033	83	9.1104	4.3620
4	2.0000	1.5874	44	6.6332	3.5303	84	9.1651	4.3795
5	2.2360	1.7099	45	6.7082	3.5568	85	9.2195	4.3968
6	2.4494	1.8171	46	6.7823	3.5830	86	9.2736	4.4140
7	2.6457	1.9129	47	6.8556	3.6088	87	9.3273	4.4310
8	2.8284	2.0000	48	6.9282	3.6342	88	9.3808	4.4479
9	3.0000	2.0800	49	7.0000	3.6593	89	9.4339	4.4647
10	3.1622	2.1544	50	7.0710	3.6840	90	9.4868	4.4814
11	3.3166	2.2239	51	7.1414	3.7084	91	9.5393	4.4979
12	3.4641	2.2894	52	7.2111	3.7325	92	9.5916	4.5143
13	3.6055	2.3513	53	7.2801	3.7562	93	9.6436	4.5306
14	3.7416	2.4101	54	7.3484	3.7797	94	9.6953	4.5468
15	3.8729	2.4662	55	7.4161	3.8029	95	9.7467	4.5629
16	4.0000	2.5198	56	7.4833	3.8258	96	9.7979	4.5788
17	4.1231	2.5712	57	7.5498	3.8485	97	9.8488	4.5947
18	4.2426	2.6207	58	7.6157	3.8708	98	9.8994	4.6104
19	4.3588	2.6684	59	7.6811	3.8929	99	9.9498	4.6260
20	4.4721	2.7144	60	7.7459	3.9148	100	10.0000	4.6415
21	4.5825	2.7589	61	7.8102	3.9364	101	10.0498	4.6570
22	4.6904	2.8020	62	7.8740	3.9578	102	10.0995	4.6723
23	4.7958	2.8438	63	7.9372	3.9790	103	10.1488	4.6875
24	4.8989	2.8844	64	8.0000	4.0000	104	10.1980	4.7026
25	5.0000	2.9240	65	8.0622	4.0207	105	10.2469	4.7176
26	5.0990	2.9624	66	8.1240	4.0412	106	10.2956	4.7326
27	5.1961	3.0000	67	8.1853	4.0615	107	10.3440	4.7474
28	5.2915	3.0365	68	8.2462	4.0816	108	10.3923	4.7622
29	5.3851	3.0723	69	8.3066	4.1015	109	10.4403	4.7768
30	5.4772	3.1072	70	8.3666	4.1212	110	10.4880	4.7914
31	5.5677	3.1413	71	8.4261	4.1408	111	10.5356	4.8058
32	5.6568	3.1748	72	8.4852	4.1601	112	10.5830	4.8202
33	5.7445	3.2075	73	8.5440	4.1793	113	10.6301	4.8345
34	5.8309	3.2396	74	8.6023	4.1983	114	10.6770	4.8488
35	5.9160	3.2710	75	8.6602	4.2171	115	10.7238	4.8629
36	6.0000	3.3019	76	8.7177	4.2358	116	10.7703	4.8769
37	6.0827	3.3322	77	8.7749	4.2543	117	10.8166	4.8909
38	6.1644	3.3619	78	8.8317	4.2726	118	10.8627	4.9048
39	6.2449	3.3912	79	8.8881	4.2908	119	10.9087	4.9186
40	6.3245	3.4199	80	8.9442	4.3088	120	10.9544	4.9324

NOTES, MEMORANDA.

SQUARE ROOTS AND CUBE ROOTS—Continued.

No.	Square Root.	Cube Root.	No.	Square Root.	Cube Root.	No.	Square Root.	Cube Root.
121	11.0000	4.9460	167	12.9228	5.5068	213	14.5945	5.9720
122	11.0453	4.9596	168	12.9614	5.5178	214	14.6287	5.9814
123	11.0905	4.9731	169	13.0000	5.5287	215	14.6628	5.9907
124	11.1355	4.9866	170	13.0384	5.5396	216	14.6969	6.0000
125	11.1803	5.0000	171	13.0766	5.5504	217	14.7309	6.0092
126	11.2249	5.0132	172	13.1148	5.5612	218	14.7648	6.0184
127	11.2694	5.0265	173	13.1529	5.5720	219	14.7986	6.0276
128	11.3137	5.0396	174	13.1909	5.5827	220	14.8323	6.0368
129	11.3578	5.0527	175	13.2287	5.5934	221	14.8660	6.0459
130	11.4017	5.0657	176	13.2664	5.6040	222	14.8996	6.0550
131	11.4455	5.0787	177	13.3041	5.6146	223	14.9331	6.0641
132	11.4891	5.0916	178	13.3416	5.6252	224	14.9666	6.0731
133	11.5325	5.1044	179	13.3790	5.6357	225	15.0000	6.0822
134	11.5758	5.1172	180	13.4164	5.6462	226	15.0332	6.0911
135	11.6189	5.1299	181	13.4536	5.6566	227	15.0665	6.1001
136	11.6619	5.1425	182	13.4907	5.6670	228	15.0996	6.1091
137	11.7046	5.1551	183	13.5277	5.6774	229	15.1327	6.1180
138	11.7473	5.1676	184	13.5646	5.6877	230	15.1657	6.1269
139	11.7898	5.1801	185	13.6014	5.6980	231	15.1986	6.1357
140	11.8321	5.1924	186	13.6381	5.7082	232	15.2315	6.1446
141	11.8743	5.2048	187	13.6747	5.7184	233	15.2643	6.1534
142	11.9163	5.2171	188	13.7113	5.7286	234	15.2970	6.1622
143	11.9582	5.2293	189	13.7477	5.7387	235	15.3297	6.1710
144	12.0000	5.2414	190	13.7840	5.7488	236	15.3622	6.1797
145	12.0415	5.2535	191	13.8202	5.7589	237	15.3948	6.1884
146	12.0830	5.2656	192	13.8564	5.7689	238	15.4272	6.1971
147	12.1243	5.2776	193	13.8924	5.7789	239	15.4596	6.2058
148	12.1655	5.2895	194	13.9283	5.7889	240	15.4919	6.2144
149	12.2065	5.3014	195	13.9642	5.7988	241	15.5241	6.2230
150	12.2474	5.3132	196	14.0000	5.8087	242	15.5563	6.2316
151	12.2882	5.3250	197	14.0356	5.8186	243	15.5884	6.2402
152	12.3288	5.3368	198	14.0712	5.8284	244	15.6204	6.2487
153	12.3693	5.3484	199	14.1067	5.8382	245	15.6524	6.2573
154	12.4096	5.3601	200	14.1421	5.8480	246	15.6843	6.2658
155	12.4498	5.3716	201	14.1774	5.8577	247	15.7162	6.2743
156	12.4899	5.3832	202	14.2126	5.8674	248	15.7480	6.2827
157	12.5299	5.3946	203	14.2478	5.8771	249	15.7797	6.2911
158	12.5698	5.4061	204	14.2828	5.8867	250	15.8113	6.2996
159	12.6095	5.4175	205	14.3178	5.8963	251	15.8429	6.3079
160	12.6491	5.4288	206	14.3527	5.9059	252	15.8745	6.3163
161	12.6885	5.4401	207	14.3874	5.9154	253	15.9059	6.3247
162	12.7279	5.4513	208	14.4222	5.9249	254	15.9373	6.3330
163	12.7671	5.4625	209	14.4568	5.9344	255	15.9687	6.3413
164	12.8062	5.4737	210	14.4913	5.9439	256	16.0000	6.3496
165	12.8452	5.4848	211	14.5258	5.9533	257	16.0312	6.3578
166	12.8840	5.4958	212	14.5602	5.9627	258	16.0623	6.3660

NOTES, MEMORANDA.

SQUARE ROOTS AND CUBE ROOTS—Continued.

No.	Square Root.	Cube Root.	No.	Square Root.	Cube Root.	No.	Square Root.	Cube Root.
259	16.0934	6.3743	**305**	17.4642	6.7313	**351**	18.7349	7.0540
260	16.1245	6.3825	**306**	17.4928	6.7386	**352**	18.7616	7.0606
261	16.1554	6.3906	**307**	17.5214	6.7459	**353**	18.7882	7.0673
262	16.1864	6.3988	**308**	17.5499	6.7533	**354**	18.8148	7.0740
263	16.2172	6.4069	**309**	17.5783	6.7606	**355**	18.8414	7.0806
264	16.2480	6.4150	**310**	17.6068	6.7678	**356**	18.8679	7.0873
265	16.2788	6.4231	**311**	17.6351	6.7751	**357**	18.8944	7.0939
266	16.3095	6.4312	**312**	17.6635	6.7824	**358**	18.9208	7.1005
267	16.3401	6.4392	**313**	17.6918	6.7896	**359**	18.9472	7.1071
268	16.3707	6.4473	**314**	17.7200	6.7968	**360**	18.9736	7.1137
269	16.4012	6.4553	**315**	17.7482	6.8040	**361**	19.0000	7.1203
270	16.4316	6.4633	**316**	17.7763	6.8112	**362**	19.0262	7.1269
271	16.4620	6.4712	**317**	17.8044	6.8184	**363**	19.0525	7.1334
272	16.4924	6.4792	**318**	17.8325	6.8256	**364**	19.0787	7.1400
273	16.5227	6.4871	**319**	17.8605	6.8327	**365**	19.1049	7.1465
274	16.5529	6.4950	**320**	17.8885	6.8399	**366**	19.1311	7.1530
275	16.5831	6.5029	**321**	17.9164	6.8470	**367**	19.1572	7.1595
276	16.6132	6.5108	**322**	17.9443	6.8541	**368**	19.1833	7.1660
277	16.6433	6.5186	**323**	17.9722	6.8612	**369**	19.2093	7.1725
278	16.6733	6.5265	**324**	18.0000	6.8682	**370**	19.2353	7.1790
279	16.7032	6.5343	**325**	18.0277	6.8753	**371**	19.2613	7.1855
280	16.7332	6.5421	**326**	18.0554	6.8823	**372**	19.2873	7.1919
281	16.7630	6.5499	**327**	18.0831	6.8894	**373**	19.3132	7.1984
282	16.7928	6.5576	**328**	18.1107	6.8964	**374**	19.3390	7.2048
283	16.8226	6.5654	**329**	18.1383	6.9034	**375**	19.3649	7.2112
284	16.8522	6.5731	**330**	18.1659	6.9104	**376**	19.3907	7.2176
285	16.8819	6.5808	**331**	18.1934	6.9173	**377**	19.4164	7.2240
286	16.9115	6.5885	**332**	18.2208	6.9243	**378**	19.4422	7.2304
287	16.9410	6.5962	**333**	18.2482	6.9313	**379**	19.4679	7.2367
288	16.9705	6.6038	**334**	18.2756	6.9383	**380**	19.4935	7.2431
289	17.0000	6.6114	**335**	18.3030	6.9451	**381**	19.5192	7.2495
290	17.0293	6.6191	**336**	18.3303	6.9520	**382**	19.5448	7.2558
291	17.0587	6.6267	**337**	18.3575	6.9589	**383**	19.5703	7.2621
292	17.0880	6.6342	**338**	18.3847	6.9658	**384**	19.5959	7.2684
293	17.1172	6.6418	**339**	18.4119	6.9726	**385**	19.6214	7.2747
294	17.1464	6.6493	**340**	18.4390	6.9795	**386**	19.6468	7.2810
295	17.1755	6.6569	**341**	18.4661	6.9863	**387**	19.6723	7.2873
296	17.2046	6.6644	**342**	18.4932	6.9931	**388**	19.6977	7.2936
297	17.2336	6.6719	**343**	18.5202	7.0000	**389**	19.7230	7.2998
298	17.2626	6.6794	**344**	18.5472	7.0067	**390**	19.7484	7.3061
299	17.2916	6.6868	**345**	18.5741	7.0135	**391**	19.7737	7.3123
300	17.3205	6.6943	**346**	18.6010	7.0203	**392**	19.7989	7.3186
301	17.3493	6.7017	**347**	18.6279	7.0271	**393**	19.8242	7.3248
302	17.3781	6.7091	**348**	18.6547	7.0338	**394**	19.8494	7.3310
303	17.4068	6.7165	**349**	18.6815	7.0405	**395**	19.8746	7.3372
304	17.4355	6.7239	**350**	18.7082	7.0472	**396**	19.8997	7.3434

NOTES, MEMORANDA.

SQUARE ROOTS AND CUBE ROOTS—Continued.

No.	Square Root.	Cube Root.	No.	Square Root.	Cube Root.	No.	Square Root.	Cube Root.
397	19.9248	7.3495	**432**	20.7846	7.5595	**467**	21.6101	7.7584
398	19.9499	7.3557	**433**	20.8086	7.5653	**468**	21.6333	7.7639
399	19.9749	7.3619	**434**	20.8326	7.5711	**469**	21.6564	7.7694
400	20.0000	7.3680	**435**	20.8566	7.5769	**470**	21.6794	7.7749
401	20.0249	7.3741	**436**	20.8806	7.5827	**471**	21.7025	7.7804
402	20.0499	7.3803	**437**	20.9045	7.5885	**472**	21.7255	7.7859
403	20.0748	7.3864	**438**	20.9284	7.5943	**473**	21.7485	7.7914
404	20.0997	7.3925	**439**	20.9523	7.6001	**474**	21.7715	7.7969
405	20.1246	7.3986	**440**	20.9761	7.6059	**475**	21.7944	7.8024
406	20.1494	7.4047	**441**	21.0000	7.6116	**476**	21.8174	7.8079
407	20.1742	7.4107	**442**	21.0237	7.6174	**477**	21.8403	7.8133
408	20.1990	7.4168	**443**	21.0475	7.6231	**478**	21.8632	7.8188
409	20.2237	7.4229	**444**	21.0713	7.6288	**479**	21.8860	7.8242
410	20.2484	7.4289	**445**	21.0950	7.6346	**480**	21.9089	7.8297
411	20.2731	7.4349	**446**	21.1187	7.6403	**481**	21.9317	7.8351
412	20.2977	7.4410	**447**	21.1423	7.6460	**482**	21.9544	7.8405
413	20.3224	7.4470	**448**	21.1660	7.6517	**483**	21.9772	7.8460
414	20.3469	7.4530	**449**	21.1896	7.6574	**484**	22.0000	7.8514
415	20.3715	7.4590	**450**	21.2132	7.6630	**485**	22.0227	7.8568
416	20.3960	7.4650	**451**	21.2367	7.6687	**486**	22.0454	7.8622
417	20.4205	7.4709	**452**	21.2602	7.6744	**487**	22.0680	7.8676
418	20.4450	7.4769	**453**	21.2837	7.6800	**488**	22.0907	7.8729
419	20.4694	7.4829	**454**	21.3072	7.6857	**489**	22.1133	7.8783
420	20.4939	7.4888	**455**	21.3307	7.6913	**490**	22.1359	7.8837
421	20.5182	7.4948	**456**	21.3541	7.6970	**491**	22.1585	7.8890
422	20.5426	7.5007	**457**	21.3775	7.7026	**492**	22.1810	7.8944
423	20.5669	7.5066	**458**	21.4009	7.7082	**493**	22.2036	7.8997
424	20.5912	7.5125	**459**	21.4242	7.7138	**494**	22.2261	7.9051
425	20.6155	7.5184	**460**	21.4476	7.7194	**495**	22.2485	7.9104
426	20.6397	7.5243	**461**	21.4709	7.7250	**496**	22.2710	7.9157
427	20.6639	7.5302	**462**	21.4941	7.7306	**497**	22.2934	7.9210
428	20.6881	7.5361	**463**	21.5174	7.7361	**498**	22.3159	7.9264
429	20.7123	7.5419	**464**	21.5406	7.7417	**499**	22.3383	7.9317
430	20.7364	7.5478	**465**	21.5638	7.7473	**500**	22.3606	7.9370
431	20.7605	7.5536	**466**	21.5870	7.7528	**501**	22.3830	7.9422

REMARKS.—The square root relates to surfaces. The square root of a number is one side of a square, the area of which equals the number.

The cube root relates to solids. The cube root of a number is one side of a square block, the cubic contents of which is represented by the number.

The numbers in the first lines can represent inches, feet, or any other quantity, the root being in the same measure. If a quantity exceeds 500 it can be raised to a higher denomination, inches to feet or pounds to tons, for example.

NOTES, MEMORANDA.

3 9015 00204 3209